bq25700A SMBus Multi-Chemistry Battery Buck-Boost Charge Controller With System Power Monitor and Processor Hot Monitor

1 Features

- Charge 1- to 4-Cell Battery From Wide Range of Input Sources
  - 3.5-V to 24-V Input Operating Voltage
  - Supports USB2.0, USB 3.0, USB 3.1 (Type C), and USB_PD Input Current Settings
  - Seamless Transition Between Buck and Boost Operation
  - Input Current and Voltage Regulation (IDPM and VDPM) Against Source Overload
- Power/Current Monitor for CPU Throttling
  - Comprehensive $\overline{\text{PROCHOT}}$ Profile, IMVP8 Compliant
  - Input and Battery Current Monitor
  - System Power Monitor, IMVP8 Compliant
- Narrow-VDC (NVDC) Power Path Management
  - Instant-On With No Battery or Deeply Discharged Battery
  - Battery Supplements System When Adapter is Fully-Loaded
  - Ideal Diode Operation in Supplement Mode
- Power Up USB Port From Battery (USB OTG)
  - Output 4.48-V to 20.8-V Compatible With USB PD
  - Output Current Limit up to 6.35 A
- 800-kHz or 1.2-MHz Programmable Switching Frequency for 1-µH to 2.2-µH Low Profile Inductor
- Host Control Interface for Flexible System Configuration
  - SMBus (bq25700A) Port for Optimal System Performance and Status Reporting
  - Hardware Pin to Set Input Current Limit Without EC Control
- High Accuracy Regulation and Monitor
  - ±0.5% Charge Voltage Regulation
  - ±2% Input/Charge Current Regulation
  - ±2% Input/Charge Current Monitor
  - ±5% Power Monitor
- Safety
  - Thermal Shutdown
  - Input, System, Battery Overvoltage Protection
  - MOSFET Inductor Overcurrent Protection
- Low Battery Quiescent Current
- Input Current Optimizer (ICO) to Extract Max Input Power
- Charge Any Battery Chemistry: Li+, LiFePO4, NiCd, NiMH, Lead Acid
- Package: 32-Pin 4 × 4 WQFN

2 Applications

- Ultra-Books, Notebooks, Detachable, and Tablet PCs and Power Bank
- Industrial and Medical Equipment
- Portable Equipment With Rechargeable Batteries

3 Description

The bq25700A is a synchronous NVDC battery buck-boost charge controller, offering low component count, high efficiency solution for space-constraint, multi-chemistry battery charging applications.

The NVDC-1 configuration allows the system to be regulated at battery voltage, but not drop below system minimum voltage. The system keeps operating even when the battery is completely discharged or removed. When load power exceeds input source rating, the battery goes into supplement mode and prevents the input source from being overloaded.

The bq25700A charges battery from a wide range of input sources including USB adapter, high voltage USB PD sources and traditional adapters.

Device Information (1)

PART NUMBER	PACKAGE	BODY SIZE (NOM)
bq25700A	WQFN (32)	4.00 mm × 4.00 mm

(1) For all available packages, see the orderable addendum at the end of the data sheet.

Application Diagram

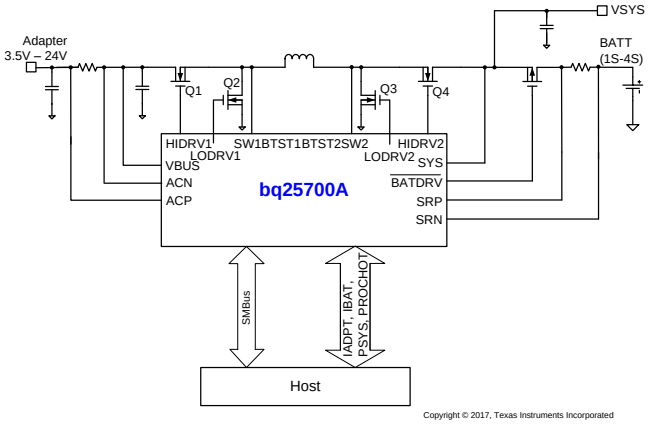

An IMPORTANT NOTICE at the end of this data sheet addresses availability, warranty, changes, use in safety-critical applications, intellectual property matters and other important disclaimers. PRODUCTION DATA.

Table of Contents

1 Features ... 1
2 Applications ... 1
3 Description ... 1
4 Revision History ... 2
5 Description (Continued) ... 3
6 Pin Configuration and Functions ... 4
7 Specifications ... 7
7.1 Absolute Maximum Ratings ... 7
7.2 ESD Ratings ... 7
7.3 Recommended Operating Conditions ... 7
7.4 Thermal Information ... 8
7.5 Electrical Characteristics ... 8
7.6 Timing Requirements ... 16
7.7 Typical Characteristics ... 17
8 Detailed Description ... 20
8.1 Overview ... 20
8.2 Functional Block Diagram ... 21
8.3 Feature Description ... 22
8.4 Device Functional Modes ... 28
8.5 Programming ... 29
8.6 Register Map ... 31
9 Application and Implementation ... 64
9.1 Application Information ... 64
9.2 Typical Application ... 64
10 Power Supply Recommendations ... 72
11 Layout ... 73
11.1 Layout Guidelines ... 73
11.2 Layout Example ... 73
12 Device and Documentation Support ... 75
12.1 Device Support ... 75
12.2 Documentation Support ... 75
12.3 Receiving Notification of Documentation Updates 75
12.4 Community Resources ... 75
12.5 Trademarks ... 75
12.6 Electrostatic Discharge Caution ... 75
12.7 Glossary ... 75
13 Mechanical, Packaging, and Orderable Information ... 76

4 Revision History

DATE	REVISION	NOTES
May 2017	*	Initial release.

Copyright © 2017, Texas Instruments Incorporated

5 Description (Continued)

During power up, the charger sets converter to buck, boost or buck-boost configuration based on input source and battery conditions. The charger automatically transits among buck, boost and buck-boost configuration without host control.

In the absence of an input source, the bq25700A supports On-the-Go (OTG) function from 1- to 4-cell battery to generate 4.48 V to 20.8 V on VBUS. During OTG mode, the charger regulates output voltage and output current.

The bq25700A monitors adapter current, battery current and system power. The flexibly programmed $\overline{\text{PROCHOT}}$ output goes directly to CPU for throttle back when needed.

Copyright © 2017, Texas Instruments Incorporated

6 Pin Configuration and Functions

RSN Package
32-Pin WQFN
Top View

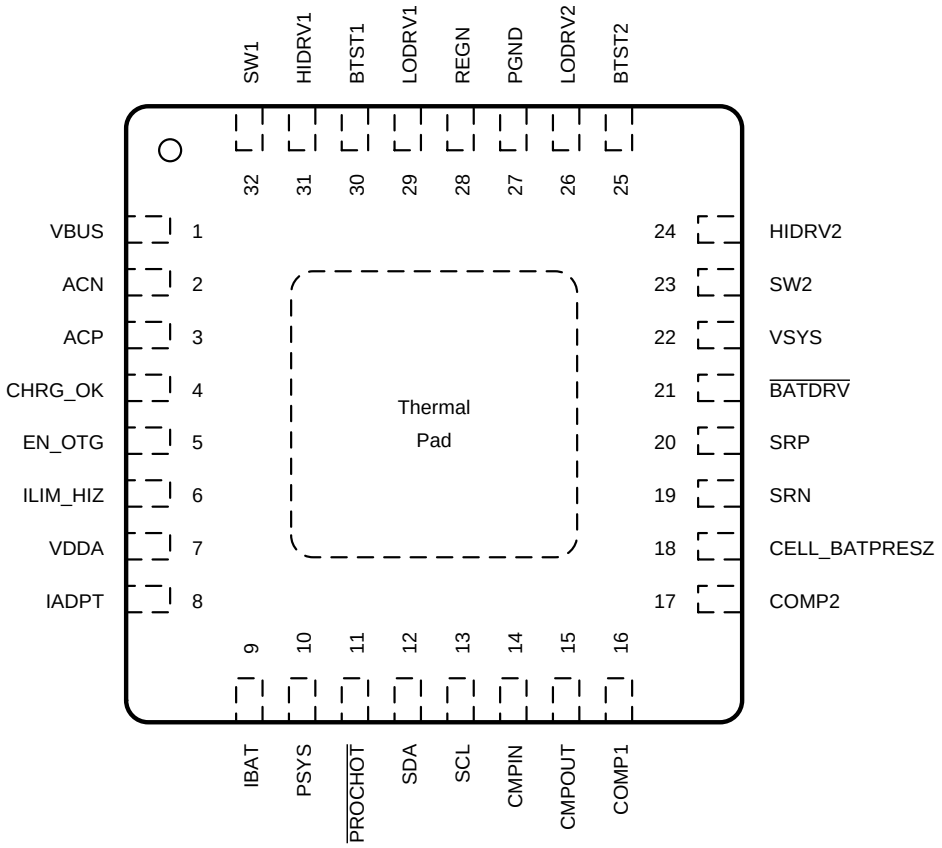

Pin Functions

PIN		I/O	DESCRIPTION
NAME	NUMBER		
ACN	2	PWR	Input current sense resistor negative input. The leakage on ACP and ACN are matched. The series resistors on the ACP and ACN pins are placed between sense resistor and filter cap. Refer to *Application and Implementation* for ACP/ACN filter design.
ACP	3	PWR	Input current sense resistor positive input. The leakage on ACP and ACN are matched. The series resistors on the ACP and ACN pins are placed between sense resistor and filter cap. Refer to *Application and Implementation* for ACP/ACN filter design.
$\overline{\text{BATDRV}}$	21	O	P-channel battery FET (BATFET) gate driver output. It is shorted to VSYS to turn off the BATFET. It goes 10 V below VSYS to fully turn on BATFET. BATFET is in linear mode to regulate VSYS at minimum system voltage when battery is depleted. BATFET is fully on during fast charge and supplement mode.
BTST1	30	PWR	Buck mode high side power MOSFET driver power supply. Connect a 0.047-µF capacitor between SW1 and BTST1. The bootstrap diode between REGN and BTST1 is integrated.
BTST2	25	PWR	Boost mode high side power MOSFET driver power supply. Connect a 0.047-µF capacitor between SW2 and BTST2. The bootstrap diode between REGN and BTST2 is integrated.
CELL_BATPRESZ	18	I	Battery cell selection pin for 1–4 cell battery setting. CELL_BATPRESZ pin is biased from VDDA. CELL_BATPRESZ pin also sets SYSOVP threshold to 5 V for 1-cell, 12 V for 2-cell , 18.5 V for 3-cell, and 19.5 for 4-cell. CELL_BATPRESZ pin is pulled below $V_{CELL_BATPRESZ_FALL}$ to indicate battery removal. The device exits LEARN mode, and disables charge. REG0x15() goes back to default.

Copyright © 2017, Texas Instruments Incorporated

Pin Functions (continued)

PIN		I/O	DESCRIPTION
NAME	NUMBER		
CHRG_OK	4	O	Open drain active high indicator to inform the system good power source is connected to the charger input. Connect to the pullup rail via 10-kΩ resistor. When VBUS rises above 3.5V or falls below 24.5V, CHRG_OK is HIGH after 50ms deglitch time. When VBUS is falls below 3.2 V or rises above 26 V, CHRG_OK is LOW.
CMPIN	14	I	Input of independent comparator. The independent comparator compares the voltage sensed on CMPIN pin to internal reference, and its output is on CMPOUT pin. Internal reference, output polarity and deglitch time is selectable by SMBus. With polarity HIGH (REG0x30[6] = 1), place a resistor between CMPIN and CMPOUT to program hysteresis. With polarity LOW (REG0x30[6] = 0), the internal hysteresis is 100 mV. If the independent comparator is not in use, tie CMPIN to ground.
CMPOUT	15	I	Open-drain output of independent comparator. Place pullup resistor from CMPOUT to pullup supply rail. Internal reference, output polarity and deglitch time are selectable by SMBus.
COMP2	17	I	Buck boost converter compensation pin 2. Refer to bq25700 EVM schematic for COMP2 pin RC network.
COMP1	16	I	Buck boost converter compensation pin 1. Refer to bq25700 EVM schematic for COMP1 pin RC network.
EN_OTG	5	I	Active HIGH to enable OTG mode. When EN_OTG pin is HIGH and REG0x32[13] is HIGH, OTG can be enabled, refer to *USB On-The-Go (OTG)* for details of how to enable OTG function
HIDRV1	31	O	Buck mode high side power MOSFET (Q1) driver. Connect to high side n-channel MOSFET gate.
HIDRV2	24	O	Boost mode high side power MOSFET(Q4) driver. Connect to high side n-channel MOSFET gate.
IADPT	8	O	Buffered adapter current output. $V_{(IADP)}$ = 20 or 40 × ($V_{(ACP)}$ – $V_{(ACN)}$). With ratio selectable in REG0x12[4]. Place a resistor from the IADPT pin to ground corresponding to inductor in use. For 2.2 µH, the resistor is 137 kΩ. Place 100-pF or less ceramic decoupling capacitor from IADPT pin to ground. IADPT output voltage is clamped below 3.3 V.
IBAT	9	O	Buffered battery current selected by SMBus. $V_{(IBAT)}$ = 8 or 16 × ($V_{(SRP)}$ – $V_{(SRN))}$ for charge current, or $V_{(IBAT)}$ = 8 or 16 × ($V_{(SRN)}$ – $V_{(SRP)}$) for discharge current, with ratio selectable in REG0x12[3]. Place 100-pF or less ceramic decoupling capacitor from IBAT pin to ground. This pin can be floating if not in use. Its output voltage is clamped below 3.3 V.
ILIM_HIZ	6	I	Input current limit input. Program ILIM_HIZ voltage by connecting a resistor divider from supply rail to ILIM_HIZ pin to ground. The pin voltage is calculated as: $V_{(ILIM_HIZ)}$ = 1 V + 40 × IDPM × RAC, in which IDPM is the target input current. The input current limit used by the charger is the lower setting of ILIM_HIZ pin and REG0x3F(). When the pin voltage is below 0.4 V, the device enters Hi-Z mode with low quiescent current. When the pin voltage is above 0.8 V, the device is out of Hi-Z mode.
LODRV1	29	O	Buck mode low side power MOSFET (Q2) driver. Connect to low side n-channel MOSFET gate.
LODRV2	26	O	Boost mode low side power MOSFET (Q3) driver. Connect to low side n-channel MOSFET gate.
PGND	27	GND	Device power ground.
$\overline{\text{PROCHOT}}$	11	O	Active low open drain output of processor hot indicator. It monitors adapter input current, battery discharge current, and system voltage. After any event in the $\overline{\text{PROCHOT}}$ profile is triggered, a minimum 10-ms pulse is asserted. The pulse width is adjustable in REG0x33[5:2].
PSYS	10	O	Current mode system power monitor. The output current is proportional to the total power from the adapter and battery. The gain is selectable through SMBus. Place resistor from PSYS to ground to generate output voltage. This pin can be floating if not in use. Its output voltage is clamped below 3.3 V. Place a capacitor in parallel with resistor for filtering.
REGN	28	PWR	6-V linear regulator output supplied from VBUS or VSYS. The LDO is active when VBUS above V_{VBUS_CONVEN}. Connect a 2.2- or 3.3-µF ceramic capacitor from REGN to power ground. REGN pin output is for power stage gate drive.
SCL	13	I	SMBus clock input. Connect to clock line from the host controller or smart battery. Connect a 10-kΩ pullup resistor according to SMBus specifications.
SDA	12	I/O	SMBus open-drain data I/O. Connect to data line from the host controller or smart battery. Connect a 10-kΩ pullup resistor according to SMBus specifications.

Copyright © 2017, Texas Instruments Incorporated

Pin Functions (continued)

PIN		I/O	DESCRIPTION
NAME	NUMBER		
SRN	19	PWR	Charge current sense resistor negative input. SRN pin is for battery voltage sensing as well. Connect SRN pin with optional 0.1-μF ceramic capacitor to GND for common-mode filtering. Connect a 0.1-μF ceramic capacitor from SRP to SRN to provide differential mode filtering. The leakage current on SRP and SRN are matched. For reverse battery plug-in protection, 10-Ω series resistors are placed on SRP and SRN.
SRP	20	PWR	Charge current sense resistor positive input. Connect 0.1-μF ceramic capacitor from SRP to SRN to provide differential mode filtering. The leakage current on SRP and SRN are matched. For reverse battery plug-in protection, 10-Ω series resistors are placed on SRP and SRN. Connect SRP pin with optional 0.1-uF ceramic capacitor to GND for common-mode filtering.
SW1	32	PWR	Buck mode high side power MOSFET driver source. Connect to the source of the high side n-channel MOSFET.
SW2	23	PWR	Boost mode high side power MOSFET driver source. Connect to the source of the high side n-channel MOSFET.
VBUS	1	PWR	Charger input voltage. An input low pass filter of 1Ω and 0.47 μF (minimum) is recommended.
VDDA	7	PWR	Internal reference bias pin. Connect a 10-Ω resistor from REGN to VDDA and a 1-μF ceramic capacitor from VDDA to power ground.
VSYS	22	PWR	Charger system voltage sensing. The system voltage regulation limit is programmed in REG0x15() and REG0x3E().
Thermal pad	–	–	Exposed pad beneath the IC. Analog ground and power ground star-connected near the IC's ground. Always solder thermal pad to the board, and have vias on the thermal pad plane connecting to power ground planes. It also serves as a thermal pad to dissipate the heat.

Copyright © 2017, Texas Instruments Incorporated

7 Specifications

7.1 Absolute Maximum Ratings

over operating free-air temperature range (unless otherwise noted)[(1)(2)]

		MIN	MAX	UNIT
Voltage	SRN, SRP, ACN, ACP, VBUS, VSYS, $\overline{\text{BATDRV}}$	–0.3	30	V
	SW1, SW2	–2.0	30	
	BTST1, BTST2, HIDRV1, HIDRV2	–0.3	36	
	LODRV1, LODRV2 (2% duty cycle)	–4.0	7	
	HIDRV1, HIDRV2 (2% duty cycle)	–4.0	36	
	SW1, SW2 (2% duty cycle)	–4.0	30	
	SDA, SCL, REGN, CHRG_OK, CELL_BATPRESZ, ILIM_HIZ, LODRV1, LODRV2, VDDA, COMP1, COMP2, CMPIN, CMPOUT, EN_OTG	–0.3	7	
	$\overline{\text{PROCHOT}}$	–0.3	5.5	
	IADPT, IBAT, PSYS	–0.3	3.6	
Differential voltage	BTST1-SW1, BTST2-SW2, HIDRV1-SW1, HIDRV2-SW2	–0.3	7	V
	SRP-SRN, ACP-ACN	–0.5	0.5	
Junction temperature range, T_J		–40	155	°C
Storage temperature, T_{stg}		–40	155	°C

(1) Stresses beyond those listed under *Absolute Maximum Ratings* may cause permanent damage to the device. These are stress ratings only, which do not imply functional operation of the device at these or any other conditions beyond those indicated under *Recommended Operating Conditions*. Exposure to absolute-maximum-rated conditions for extended periods may affect device reliability.
(2) All voltages are with respect to GND if not specified. Currents are positive into, negative out of the specified terminal. Consult Packaging Section of the data book for thermal limitations and considerations of packages.

7.2 ESD Ratings

		VALUE	UNIT
$V_{(ESD)}$ Electrostatic discharge	Human-body model (HBM), per ANSI/ESDA/JEDEC JS-001[(1)]	±2000	V
	Charged-device model (CDM), per JEDEC specification JESD22-C101[(2)]	±500	

(1) JEDEC document JEP155 states that 500-V HBM allows safe manufacturing with a standard ESD control process.
(2) JEDEC document JEP157 states that 250-V CDM allows safe manufacturing with a standard ESD control process.

7.3 Recommended Operating Conditions

over operating free-air temperature range (unless otherwise noted)

		MIN	MAX	UNIT
Voltage	ACN, ACP, VBUS	0	24	V
	SRN, SRP, VSYS, $\overline{\text{BATDRV}}$	0	19.2	
	SW1, SW2	–2	24	
	BTST1, BTST2, HIDRV1, HIDRV2	0	30	
	SDA, SCL, REGN, CHRG_OK, CELL_BATPRESZ, ILIM_HIZ, LODRV1, LODRV2, VDDA, COMP1, COMP2, CMPIN, CMPOUT	0	6.5	
	$\overline{\text{PROCHOT}}$	0	5.3	
	IADPT, IBAT, PSYS	0	3.3	
Differential voltage	BTST1-SW1, BTST2-SW2, HIDRV1-SW1, HIDRV2-SW2	0	6.5	V
	SRP-SRN, ACP-ACN	–0.35	0.35	
Junction temperature, T_J		–40	125	°C
Operating free-air temperature, T_A		–40	85	°C

Copyright © 2017, Texas Instruments Incorporated

7.4 Thermal Information

THERMAL METRIC[1]		bq25700A RSN (WQFN) 32 PINS	UNIT
$R_{\theta JA}$	Junction-to-ambient thermal resistance	37.2	°C/W
$R_{\theta JC(top)}$	Junction-to-case (top) thermal resistance	26.1	°C/W
$R_{\theta JB}$	Junction-to-board thermal resistance	7.8	°C/W
ψ_{JT}	Junction-to-top characterization parameter	0.3	°C/W
ψ_{JB}	Junction-to-board characterization parameter	7.8	°C/W
$R_{\theta JC(bot)}$	Junction-to-case (bottom) thermal resistance	2.3	°C/W

(1) For more information about traditional and new thermal metrics, see the *Semiconductor and IC Package Thermal Metrics* application report.

7.5 Electrical Characteristics

over T_J = –40 to 125°C (unless otherwise noted)

PARAMETER		TEST CONDITIONS	MIN	TYP	MAX	UNIT
V_{INPUT_OP}	Input voltage operating range		3.5		26	V
REGULATION ACCURACY						
MAX SYSTEM VOLTAGE REGULATION						
V_{SYSMAX_RNG}	System voltage regulation, measured on V_{SYS}		1.024		19.2	V
V_{SYSMAX_ACC}	System voltage regulation accuracy (charge disable)	REG0x15() = 0x41A0H (16.800 V)		V_{SRN} + 160 mV		V
			–2%		2%	
		REG0x15() = 0x3130H (12.592 V)		V_{SRN} + 160 mV		V
			–2%		2%	
		REG0x15() = 0x20D0H (8.400 V)		V_{SRN} + 160 mV		V
			–3%		3%	
		REG0x15() = 0x1060H (4.192 V)		V_{SRN} + 160 mV		V
			–3%		3%	
MINIMUM SYSTEM VOLTAGE REGULATION						
V_{SYSMIN_RNG}	System voltage regulation, measured on V_{SYS}		1.024		19.2	V
$V_{SYSMIN_REG_ACC}$	Minimum system voltage regulation accuracy (charge enable, VBAT below REG0x3E() setting)	REG0x3E() = 0x3000H		12.288		V
			–2%		2%	
		REG0x3E() = 0x2400H		9.216		V
			–2%		2%	
		REG0x3E() = 0x1800H		6.144		V
			–3%		3%	
		REG0x3E() = 0x0E00H		3.584		V
			–3%		4%	
CHARGE VOLTAGE REGULATION						
V_{BAT_RNG}	Battery voltage regulation		1.024		19.2	V
$V_{BAT_REG_ACC}$	Battery voltage regulation accuracy (charge enable) (0°C to 85°C)	REG0x15() = 0x41A0H		16.8		V
			–0.5%		0.5%	
		REG0x15() = 0x3130H		12.592		V
			–0.5%		0.5%	
		REG0x15() = 0x20D0H		8.4		V
			–0.6%		0.6%	
		REG0x15() = 0x1060H		4.192		V
			–1.1%		1.2%	

Copyright © 2017, Texas Instruments Incorporated

Electrical Characteristics (continued)

over T_J = –40 to 125°C (unless otherwise noted)

PARAMETER		TEST CONDITIONS	MIN	TYP	MAX	UNIT
CHARGE CURRENT REGULATION IN FAST CHARGE						
$V_{IREG_CHG_RNG}$	Charge current regulation differential voltage range	VIREG_CHG = VSRP – VSRN	0		81.28	mV
$I_{CHRG_REG_ACC}$	Charge current regulation accuracy 10-mΩ current sensing resistor, VBAT above 0x3E() setting (0°C to 85°C)	REG0x14() = 0x1000H		4096		mA
			–3%		2%	
		REG0x14() = 0x0800H		2048		mA
			–4%		3%	
		REG0x14() = 0x0400H		1024		mA
			–5%		6%	
		REG0x14() = 0x0200H		512		mA
			–12%		12%	
CHARGE CURRENT REGULATION IN LDO MODE						
I_{CLAMP}	Pre-charge current clamp	CELL 2s-4s		384		mA
		CELL 1 s, V_{SRN} < 3 V		384		mA
		CELL 1 s, 3 V < V_{SRN} < VSYSMIN		2		A
$I_{PRECHRG_REG_ACC}$	Pre-charge current regulation accuracy with 10-Ω SRP/SRN series resistor, VBAT below REG0x3E() setting (0°C to 85°C)	REG0x14() = 0x0180H		384		mA
		2S-4S	–15%		15%	
		1S	–25%		25%	
		REG0x14() = 0x0100H		256		mA
		2S-4S	–20%		20%	
		1S	–35%		35%	
		REG0x14() = 0x00C0H		192		mA
		2S-4S	–25%		25%	
		1S	–50%		50%	
		REG0x14() = 0x0080H		128		mA
		2S-4S	–30%		30%	
$I_{LEAK_SRP_SRN}$	SRP, SRN leakage current mismatch (0°C to 85°C)		–12		10	µA
INPUT CURRENT REGULATION						
$V_{IREG_DPM_RNG}$	Input current regulation differential voltage range	V_{IREG_DPM} = V_{ACP} – V_{ACN}	0.5		64	mV
$I_{DPM_REG_ACC}$	Input current regulation accuracy (–40°C to 105°C) with 10-Ω ACP/ACN series resistor	REG0x3F() = 0x4FFFH	3820		4000	mA
		REG0x3F() = 0x3BFFH	2830		3000	mA
		REG0x3F() = 0x1DFFH	1350		1500	mA
		REG0x3F() = 0x09FFH	340		500	mA
$I_{LEAK_ACP_ACN}$	ACP, ACN leakage current mismatch		–16		10	µA
$V_{IREG_DPM_RNG_ILIM}$	Voltage Range for input current regulation		1		4	V
$I_{DPM_REG_ACC_ILIM}$	Input Current Regulation Accuracy on ILIM_HIZ pin V_{ILIM_HIZ} = 1 V + 40 × IDPM × R_{AC}, with 10-Ω ACP/ACN series resistor	V_{ILIM_HIZ} = 2.6 V	3800	4000	4200	mA
		V_{ILIM_HIZ} = 2.2 V	2800	3000	3200	mA
		V_{ILIM_HIZ} = 1.6 V	1300	1500	1700	mA
		V_{ILIM_HIZ} = 1.2 V	300	500	700	mA
I_{LEAK_ILIM}	I_{LIM_HIZ} pin leakage		–1		1	µA
INPUT VOLTAGE REGULATION						
$V_{IREG_DPM_RNG}$	Input voltage regulation range	Voltage on VBUS	3.2		19.52	V

Copyright © 2017, Texas Instruments Incorporated

Electrical Characteristics (continued)

over T_J = –40 to 125°C (unless otherwise noted)

PARAMETER		TEST CONDITIONS	MIN	TYP	MAX	UNIT
$V_{DPM_REG_ACC}$	Input voltage regulation accuracy	REG0x3B()=0x3C80H		18688		mV
			–2%		2%	
		REG0x3B()=0x1E00H		10880		mV
			–2.5%		2.5%	
		REG0x3B()=0x0500H		4480		mV
			–3%		5%	
OTG CURRENT REGULATION						
$V_{IOTG_REG_RNG}$	Input current regulation differential voltage range	$V_{IREG_DPM} = V_{ACP} – V_{ACN}$	0		81.28	mV
I_{OTG_ACC}	Input current regulation accuracy with 50-mA LSB, with 10-Ω ACP/ACN series resistor	REG0x3C() = 0x3C00H	2800	3000	3200	mA
		REG0x3C() = 0x1E00H	1300	1500	1700	mA
		REG0x3C() = 0x0A00H	300	500	700	mA
OTG VOLTAGE REGULATION						
$V_{IREG_DPM_RNG}$	Input voltage regulation range	Voltage on VBUS	4.48		20.8	V
$V_{OTG_REG_ACC}$	OTG voltage regulation accuracy	REG0x3D()=0x3CC0H		20.032		V
			–2%		2%	
		REG0x3D()=0x1D80H		12.032		V
			–2%		2%	
		REG0x3D()=0x0240H		5.056		V
			–3%		3%	
REFERENCE AND BUFFER						
REGN REGULATOR						
V_{REGN_REG}	REGN regulator voltage (0 mA–60 mA)	V_{VBUS} = 10 V	5.7	6	6.3	V
$V_{DROPOUT}$	REGN voltage in drop out mode	V_{VBUS} = 5 V, I_{LOAD} = 20 mA	3.8	4.3	4.6	V
$I_{REGN_LIM_Charging}$	REGN current limit when converter is enabled	V_{VBUS} = 10 V, force V_{REGN} = 4 V	50	65		mA
C_{REGN}	REGN output capacitor required for stability	I_{LOAD} = 100 µA to 50 mA	2.2			µF
C_{VDDA}	REGN output capacitor required for stability	I_{LOAD} = 100 µA to 50 mA	1			µF
QUIESCENT CURRENT						
$I_{BAT_BATFET_ON}$	System powered by battery. BATFET on. $I_{SRN} + I_{SRP} + I_{SW2} + I_{BTST2} + I_{SW1} + I_{BTST1} + {}_{ACP} + I_{ACN} + I_{VBUS} + I_{VSYS}$	VBAT = 18 V, REG0x12[15] = 1, in low power mode		22	45	µA
		VBAT = 18 V, REG0x12[15] = 0, REG0x30[14:13] = 01, REGN off		105	175	µA
		VBAT=18 V, REG0x12[15] = 0, REG0x30[14:13] = 10, REGN off		60	90	µA
		VBAT = 18 V, REG0x12[15] = 0, REG0x30[12] = 0, REGN on, EN_PSYS		860	1150	µA
		VBAT = 18 V, REG0x12[15] = 0, REG0x30[12] = 1, REGN on		960	1250	
$I_{AC_SW_LIGHT_buck}$	Input current during PFM in buck mode, no load, $I_{VBUS} + I_{ACP} + I_{ACN} + I_{VSYS} + I_{SRP} + I_{SRN} + I_{SW1} + I_{BTST} + I_{SW2} + I_{BTST2}$	VIN = 20 V, VBAT = 12.6 V, 3 s, REG0x12[10] = 0; MOSFET Qg = 4 nC		2.2		mA

Copyright © 2017, Texas Instruments Incorporated

Electrical Characteristics (continued)

over T_J = –40 to 125°C (unless otherwise noted)

PARAMETER		TEST CONDITIONS	MIN	TYP	MAX	UNIT
$I_{AC_SW_LIGHT_boost}$	Input current during PFM in boost mode, no load, I_{VBUS} + I_{ACP} + I_{ACN} + I_{VSYS} + I_{SRP} + I_{SRN} + I_{SW1} + I_{BTST2} + I_{SW2} + I_{BTST2}	VIN = 5 V, VBAT = 8.4 V, 2 s, REG0x12[10] = 0; MOSFET Qg = 4 nC		2.7		mA
$I_{AC_SW_LIGHT_buckboost}$	Input current during PFM in buck boost mode, no load, I_{VBUS} + I_{ACP} + I_{ACN} + I_{VSYS} + I_{SRP} + I_{SRN} + I_{SW1} + I_{BTST1} + I_{SW2} + I_{BTST2}	VIN = 12 V, VBAT = 12 V, REG0x12[10] = 0; MOSFET Qg = 4 nC		2.4		mA
$I_{OTG_STANDBY}$	Quiescent current during PFM in OTG mode I_{VBUS} + I_{ACP} + I_{ACN} + I_{VSYS} + I_{SRP} + I_{SRN} + I_{SW1} + I_{BTST2} + I_{SW2} + I_{BTST2}	VBAT = 8.4 V, VBUS = 5 V, 800-kHz switching frequency, MOSFET Qg = 4 nC		3		mA
		VBAT = 8.4 V, VBUS = 12 V, 800-kHz switching frequency, MOSFET Qg = 4 nC		4.2		
		VBAT = 8.4 V, VBUS = 20 V, 800-kHz switching frequency, MOSFET Qg = 4 nC		6.2		
V_{ACP/N_OP}	Input common mode range	Voltage on ACP/ACN	3.8		26	V
V_{IADPT_CLAMP}	I_{ADPT} output clamp voltage		3.1	3.2	3.3	V
I_{IADPT}	I_{ADPT} output current				1	mA
A_{IADPT}	Input current sensing gain	$V_{(IADPT)}$ / $V_{(ACP-ACN)}$, REG0x12[4] = 0		20		V/V
		$V_{(IADPT)}$ / $V_{(ACP-ACN)}$, REG0x12[4] = 1		40		V/V
V_{IADPT_ACC}	Input current monitor accuracy	$V_{(ACP-ACN)}$ = 40.96 mV	–2%		2%	
		$V_{(ACP-ACN)}$ = 20.48 mV	–3%		3%	
		$V_{(ACP-ACN)}$ =10.24 mV	–6%		6%	
		$V_{(ACP-ACN)}$ = 5.12 mV	–10%		10%	
C_{IADPT_MAX}	Maximum output load capacitance				100	pF
V_{SRP/N_OP}	Battery common mode range	Voltage on SRP/SRN	2.5		18	V
V_{IBAT_CLAMP}	IBAT output clamp voltage		3.05	3.2	3.3	V
I_{IBAT}	IBAT output current				1	mA
A_{IBAT}	Charge and discharge current sensing gain on IBAT pin	$V_{(IBAT)}$ / $V_{(SRN-SRP)}$, REG0x12[3] = 0,		8		V/V
		$V_{(IBAT)}$ / $V_{(SRN-SRP)}$, REG0x12[3] = 1,		16		V/V
$I_{IBAT_CHG_ACC}$	Charge and discharge current monitor accuracy on IBAT pin	$V_{(SRN-SRP)}$ = 40.96 mV	–2%		2%	
		$V_{(SRN-SRP)}$ = 20.48 mV	–3%		4%	
		$V_{(SRN-SRP)}$ =10.24 mV	–6%		6%	
		$V_{(SRN-SRP)}$ = 5.12 mV	–12%		12%	
C_{IBAT_MAX}	Maximum output load capacitance				100	pF
SYSTEM POWER SENSE AMPLIFIER						
V_{PSYS}	PSYS output voltage range		0		3.3	V
I_{PSYS}	PSYS output current		0		160	µA
A_{PSYS}	PSYS system gain	$V_{(PSYS)}$ / ($P_{(IN)}$+ $P_{(BAT)}$), REG0x30[9] = 1		1		µA/W

Electrical Characteristics (continued)

over T_J = –40 to 125°C (unless otherwise noted)

PARAMETER		TEST CONDITIONS	MIN	TYP	MAX	UNIT
V_{PSYS_ACC}	PSYS gain accuracy (REG0x30[9] = 1)	Adapter only with system power = 19.5 V / 45 W, T_A = 0 to 85°C	–5%		5%	
		Adapter only with system power = 19.5 V / 45 W, T_A = –40 to 125°C	–7%		6%	
		Battery only with system power = 11 V / 44 W, T_A = 0 to 85°C	–5%		5%	
		Battery only with system power = 11 V / 44 W, T_A = –40 to 125°C	–6%		6%	
V_{PSYS_CLAMP}	PSYS clamp voltage		3		3.3	V
COMPARATOR						
VBUS UNDER VOLTAGE LOCKOUT COMPARATOR						
V_{VBUS_UVLOZ}	VBUS undervoltage rising threshold	VBUS rising	2.34	2.55	2.77	V
V_{VBUS_UVLO}	VBUS undervoltage falling threshold	VBUS falling	2.2	2.4	2.6	V
$V_{VBUS_UVLO_HYST}$	VBUS undervoltage hysteresis			150		mV
V_{VBUS_CONVEN}	VBUS converter enable rising threshold	VBUS rising	3.2	3.5	3.9	V
$V_{VBUS_CONVENZ}$	VBUS converter enable falling threshold	VBUS falling	2.9	3.2	3.5	V
$V_{VBUS_CONVEN_HYST}$	VBUS converter enable hysteresis			400		mV
BATTERY UNDER VOLTAGE LOCKOUT COMPARATOR						
V_{VBAT_UVLOZ}	VBAT undervoltage rising threshold	VSRN rising	2.35	2.55	2.75	V
V_{VBAT_UVLO}	VBAT undervoltage falling threshold	VSRN falling	2.2	2.4	2.6	V
$V_{VBAT_UVLO_HYST}$	VBAT undervoltage hysteresis			150		mV
V_{VBAT_OTGEN}	VBAT OTG enable rising threshold	VSRN rising	3.3	3.55	3.75	V
V_{VBAT_OTGENZ}	VBAT OTG enable falling threshold	VSRN falling	3	3.2	3.4	V
$V_{VBAT_OTGEN_HYST}$	VBAT OTG enable hysteresis			350		mV
VBUS UNDER VOLTAGE COMPARATOR (OTG MODE)						
$V_{VBUS_OTG_UV}$	VBUS undervoltage falling threshold	As percentage of REG0x3B()		85.0%		
$t_{VBUS_OTG_UV}$	VBUS undervoltage deglitch time			7		ms
VBUS OVER VOLTAGE COMPARATOR (OTG MODE)						
$V_{VBUS_OTG_OV}$	VBUS overvoltage rising threshold	As percentage of REG0x3B()		105%		
$t_{VBUS_OTG_OV}$	VBUS Over-Voltage Deglitch Time			10		ms
$V_{BAT_SYSMIN_RISE}$	LDO mode to fast charge mode threshold, VSRN rising	as percentage of 0x3E()	98%	100%	102%	
$V_{BAT_SYSMIN_FALL}$	LDO mode to fast charge mode threshold, VSRN falling	as percentage of 0x3E()		97.5%		

Copyright © 2017, Texas Instruments Incorporated

Electrical Characteristics (continued)

over T_J = –40 to 125°C (unless otherwise noted)

PARAMETER		TEST CONDITIONS	MIN	TYP	MAX	UNIT
$V_{BAT_SYSMIN_HYST}$	Fast charge mode to LDO mode threshold hysteresis	as percentage of 0x3E()		2.5%		
BATTERY LOWV COMPARATOR (Pre-charge to Fast Charge Thresold for 1S)						
V_{BATLV_FALL}	BATLOWV falling threshold	1 s		2.80		V
V_{BATLV_RISE}	BATLOWV rising threshold			3.00		V
V_{BATLV_RHYST}	BATLOWV hysteresis			200		mV
INPUT OVER-VOLTAGE COMPARATOR (ACOVP)						
V_{ACOV_RISE}	VBUS overvoltage rising threshold	VBUS rising	25	26	27	V
V_{ACOV_FALL}	VBUS overvoltage falling threshold	VBUS falling	24	24.5	25	V
V_{ACOV_HYST}	VBUS overvoltage hysteresis			1.5		V
$t_{ACOV_RISE_DEG}$	VBUS overvoltage rising deglitch	VBUS rising to stop converter		100		µs
$t_{ACOV_FALL_DEG}$	VBUS overvoltage falling deglitch	VBUS falling to start converter		1		ms
INPUT OVER CURRENT COMPARATOR (ACOC)						
V_{ACOC}	ACP to ACN rising threshold, w.r.t. ILIM2 in REG0x33[15:11]	Voltage across input sense resistor rising, Reg0x31[2] = 1	195%	210%	225%	
V_{ACOC_FLOOR}	Measure between ACP and ACN	Set IDPM to minimum	44	50	56	mV
$V_{ACOC_CEILING}$	Measure between ACP and ACN	Set IDPM to maximum	172	180	188	mV
$t_{ACOC_DEG_RISE}$	Rising deglitch time	Deglitch time to trigger ACOC		250		µs
t_{ACOC_RELAX}	Relax time	Relax time before converter starts again		250		ms
SYSTEM OVER-VOLTAGE COMPARATOR (SYSOVP)						
V_{SYSOVP_RISE}	System overvoltage rising threshold to turn off converter	1 s	4.85	5	5.1	V
		2 s	11.7	12	12.2	
		3 s	19	19.5	20	
		4 s	19	19.5	20	
V_{SYSOVP_FALL}	System overvoltage falling threshold	1 s		4.8		V
		2 s		11.5		
		3 s		19		
		4 s		19		
I_{SYSOVP}	Discharge current when SYSOVP stop switching was triggered	on SYS		20		mA
BAT OVER-VOLTAGE COMPARATOR (BATOVP)						
V_{BATOVP_RISE}	Overvoltage rising threshold as percentage of V_{BAT_REG} in REG0x15()	1 s, 4.2 V	102.5%	104%	106%	
		2 s - 4 s	102.5%	104%	105%	
V_{BATOVP_FALL}	Overvoltage falling threshold as percentage of VBAT_REG in REG0x15()	1 s	100%	102%	104%	
		2 s - 4 s	100%	102%	103%	
V_{BATOVP_HYST}	Overvoltage hysteresis as percentage of V_{BAT_REG} in REG0x15()	1 s		2%		
		2 s - 4 s		2%		
I_{BATOVP}	Discharge current during BATOVP	on SRP and SRN		20		mA

Electrical Characteristics (continued)

over T_J = –40 to 125°C (unless otherwise noted)

PARAMETER		TEST CONDITIONS	MIN	TYP	MAX	UNIT
t_{BATOVP_RISE}	Overvoltage rising deglitch to turn off $\overline{BATDRV}$ to disable charge			20		ms
CONVERTER OVER-CURRENT COMPARATOR (Q2)						
VOCP_limit_Q2	Converter Over-Current Limit	Reg0x31[5]=1		150		mV
		Reg0x31[5]=0		210		
VOCP_limit_SYSSHORT_Q2	System Short or SRN<2.5 V	Reg0x31[5]=1		45		mV
		Reg0x31[5]=0		60		
CONVERTER OVER-CURRENT COMPARATOR (ACX)						
VOCP_limit_Q3	Converter Over-Current Limit	Reg0x31[4]=1		150		mV
		Reg0x31[4]=0		280		
VOCP_limit_SYSSHORT_Q3	System Short or SRN<2.5 V	Reg0x31[4]=1		90		mV
		Reg0x31[4]=0		150		
THERMAL SHUTDOWN COMPARATOR						
T_{SHUT_RISE}	Thermal shutdown rising temperature	Temperature increasing		155		°C
T_{SHUTF_FALL}	Thermal shutdown falling temperature	Temperature reducing		135		°C
T_{SHUT_HYS}	Thermal shutdown hysteresis			20		°C
t_{SHUT_RDEG}	Thermal shutdown rising deglitch			100		µs
t_{SHUT_FHYS}	Thermal shutdown falling deglitch			12		ms
VSYS PROCHOT COMPARATOR						
$V_{SYS_\overline{PROCHOT}}$	V_{SYS} threshold falling threshold	Reg0x33[7:6] = 00, 1 s		2.85		V
		Reg0x33[7:6] = 00, 2–4 s		5.75		V
		Reg0x33[7:6] = 01, 1 s	2.95	3.1	3.25	V
		Reg0x33[7:6] = 01, 2–4 s	5.8	5.95	6.1	V
		Reg0x33[7:6] = 10, 1 s		3.3		V
		Reg0x33[7:6] = 10, 2–4 s		6.25		V
		Reg0x33[7:6] = 11, 1 s		3.5		V
		Reg0x33[7:6] = 11, 2–4 s		6.5		V
$t_{SYS_PRO_RISE_DEG}$	V_{SYS} rising deglitch for throttling			8		µs
ICRIT PROCHOT COMPARATOR						
V_{ICRIT_PRO}	Input current rising threshold for throttling as 10% above ILIM2 (REG0x33[15:11])	Reg0x33[15:11] = 00000	105%	110%	116%	
		Reg0x33[15:11] = 01001	142%	150%	156%	
INOM PROCHOT COMPARATOR						
V_{INOM_PRO}	INOM rising threshold as 10% above IIN (REG0x3F())		105%	110%	116%	
IDCHG PROCHOT COMPARATOR						
V_{IDCHG_PRO}	IDCHG threshold for throttling for IDSCHG of 6 A	Reg0x34[15:10] =001100		6272		mA
			95%		102%	
INDEPENDENT COMPARATOR						
V_{INDEP_CMP}	Independent comparator threshold	Reg0x30[7] = 1, CMPIN falling	1.17	1.2	1.23	V
		Reg0x30[7] = 0, CMPIN falling	2.27	2.3	2.33	V

Copyright © 2017, Texas Instruments Incorporated

Electrical Characteristics (continued)

over T_J = –40 to 125°C (unless otherwise noted)

PARAMETER		TEST CONDITIONS	MIN	TYP	MAX	UNIT
$V_{INDEP_CMP_HYS}$	Independent comparator hysteresis	Reg0x3B[6] = 0, CMPIN falling		100		mV
POWER MOSFET DRIVER						
PWM OSCILLATOR AND RAMP						
F_{SW}	PWM switching frequency	Reg0x12[9] = 0	1020	1200	1380	kHz
		Reg0x12[9] = 1	680	800	920	kHz
BATFET GATE DRIVER (BATDRV)						
V_{BATDRV_ON}	Gate drive voltage on BATFET		8.5	10	11.5	V
V_{BATDRV_DIODE}	Drain-source voltage on BATFET during ideal diode operation			30		mV
R_{BATDRV_ON}	Measured by sourcing 10-µA current to BATDRV		3	4	6	kΩ
R_{BATDRV_OFF}	Measured by sinking 10-µA current from BATDRV			1.2	2.1	kΩ
PWM HIGH SIDE DRIVER (HIDRV Q1)						
$R_{DS_HI_ON_Q1}$	High side driver (HSD) turnon resistance	$V_{BTST1} – V_{SW1}$ = 5 V		6		Ω
$R_{DS_HI_OFF_Q1}$	High side driver turnoff resistance	$V_{BTST1} – V_{SW1}$ = 5 V		1.3	2.2	Ω
$V_{BTST1_REFRESH}$	Bootstrap refresh comparator falling threshold voltage	$V_{BTST1} – V_{SW1}$ when low side refresh pulse is requested	3.2	3.7	4.6	V
PWM HIGH SIDE DRIVER (HIDRV Q4)						
$R_{DS_HI_ON_Q4}$	High side driver (HSD) turnon resistance	$V_{BTST2} – V_{SW2}$ = 5 V		6		Ω
$R_{DS_HI_OFF_Q4}$	High side driver turnoff resistance	$V_{BTST2} – V_{SW2}$ = 5 V		1.5	2.4	Ω
$V_{BTST2_REFRESH}$	Bootstrap refresh comparator falling threshold voltage	$V_{BTST2} – V_{SW2}$ when low side refresh pulse is requested	3.3	3.7	4.6	V
PWM LOW SIDE DRIVER (LODRV Q2)						
$R_{DS_LO_ON_Q2}$	Low side driver (LSD) turnon resistance	$V_{BTST1} – V_{SW1}$ = 5.5 V		6		Ω
$R_{DS_LO_OFF_Q2}$	Low side driver turnoff resistance	$V_{BTST1} – V_{SW1}$ = 5.5 V		1.7	2.6	Ω
PWM LOW SIDE DRIVER (LODRV Q3)						
$R_{DS_LO_ON_Q3}$	Low side driver (LSD) turnon resistance	$V_{BTST2} – V_{SW2}$ = 5.5 V		7.6		Ω
$R_{DS_LO_OFF_Q3}$	Low side driver turnoff resistance	$V_{BTST2} – V_{SW2}$ = 5.5 V		2.9	4.6	Ω
INTERNAL SOFT START During Charge Enable						
SSSTEP_DAC	Soft Start Step Size			64		mA
SSSTEP_DAC	Soft Start Step Time			8		µs
INTEGRATED BTST DIODE (D1)						
V_{F_D1}	Forward bias voltage	I_F = 20 mA at 25°C		0.8		V
V_{R_D1}	Reverse breakdown voltage	I_R = 2 µA at 25°C			20	V
INTEGRATED BTST DIODE (D2)						
V_{F_D2}	Forward bias voltage	I_F = 20 mA at 25°C		0.8		V
V_{R_D2}	Reverse breakdown voltage	I_R = 2 µA at 25°C			20	V
PWM DRIVERS TIMING						

Copyright © 2017, Texas Instruments Incorporated

Electrical Characteristics (continued)

over T_J = –40 to 125°C (unless otherwise noted)

PARAMETER		TEST CONDITIONS	MIN	TYP	MAX	UNIT
INTERFACE						
LOGIC INPUT (SDA, SCL, EN_OTG)						
V_{IN_LO}	Input low threshold	SMBus			0.8	V
V_{IN_HI}	Input high threshold	SMBus (bq25700A)	2.1			V
LOGIC OUTPUT OPEN DRAIN (SDA, CHRG_OK, CMPOUT)						
V_{OUT_LO}	Output saturation voltage	5-mA drain current			0.4	V
V_{OUT_LEAK}	Leakage current	V = 7 V	–1		1	mA
LOGIC OUTPUT OPEN DRAIN SDA						
$V_{OUT_LO_SDA}$	Output Saturation Voltage	5 mA drain current			0.4	V
$V_{OUT_LEAK_SDA}$	Leakage Current	V = 7V	–1		1	mA
LOGIC OUTPUT OPEN DRAIN CHRG_OK						
$V_{OUT_LO_CHRG_OK}$	Output Saturation Voltage	5 mA drain current			0.4	V
$V_{OUT_LEAK_CHRG_OK}$	Leakage Current	V = 7V	–1		1	mA
LOGIC OUTPUT OPEN DRAIN CMPOUT						
$V_{OUT_LO_CMPOUT}$	Output Saturation Voltage	5 mA drain current			0.4	V
$V_{OUT_LEAK_CMPOUT}$	Leakage Current	V = 7V	–1		1	mA
LOGIC OUTPUT OPEN DRAIN ($\overline{\text{PROCHOT}}$)						
$V_{OUT_LO_PROCHOT}$	Output saturation voltage	50-Ω pullup to 1.05 V / 5-mA load			300	mV
$V_{OUT_LEAK_PROCHOT}$	Leakage current	V = 5.5 V	–1		1	mA
ANALOG INPUT (ILIM_HIZ)						
V_{HIZ_LO}	Voltage to get out of HIZ mode	ILIM_HIZ pin rising	0.8			V
V_{HIZ_HIGH}	Voltage to enable HIZ mode	ILIM_HIZ pin falling			0.4	V
ANALOG INPUT (CELL_BATPRESZ)						
V_{CELL_4S}	4S	REGN = 6 V, as percentage of REGN	68.4%	75%		
V_{CELL_3S}	3S	REGN = 6 V, as percentage of REGN	51.7%	55%	65%	
V_{CELL_2S}	2S	REGN = 6 V, as percentage of REGN	35%	40%	49.1%	
V_{CELL_1S}	1S	REGN = 6 V, as percentage of REGN	18.4%	25%	31.6%	
$V_{CELL_BATPRESZ_RISE}$	Battery is present		18%			
$V_{CELL_BATPRESZ_FALL}$	Battery is removed	CELL_BATPRESZ falling			15%	
ANALOG INPUT (COMP1, COMP2)						
I_{LEAK_COMP1}	COMP1 Leakage		–120		120	nA
I_{LEAK_COMP2}	COMP2 Leakage		–120		120	nA

7.6 Timing Requirements

		MIN	TYP	MAX	UNIT
SMBus TIMING CHARACTERISTICS					
t_r	SCLK/SDATA rise time			1	µs
t_f	SCLK/SDATA fall time			300	ns
$t_{W(H)}$	SCLK pulse width high	4		50	µs
$t_{W(L)}$	SCLK Pulse Width Low	4.7			µs
$t_{SU(STA)}$	Setup time for START condition	4.7			µs
$t_{H(STA)}$	START condition hold time after which first clock pulse is generated	4			µs

Copyright © 2017, Texas Instruments Incorporated

Timing Requirements (continued)

		MIN	TYP	MAX	UNIT
$t_{SU(DAT)}$	Data setup time	250			ns
$t_{H(DTA)}$	Data hold time	300			ns
$t_{SU(STOP)}$	Setup time for STOP condition	4			µs
$t_{(BUF)}$	Bus free time between START and STOP condition	4.7			µs
$F_{S(CL)}$	Clock Frequency	10		100	KHz
HOST COMMUNICATION FAILURE					
$t_{timeout}$	SMBus bus release timeout(1)	25		35	ms
t_{BOOT}	Deglitch for watchdog reset signal	10			ms
t_{WDI}	Watchdog timeout period, ChargeOption() bit [14:13] = 01(2)	35	44	53	s
	Watchdog timeout period, ChargeOption() bit bit [14:13] = 10(2)	70	88	105	s
	Watchdog timeout period, ChargeOption() bit bit [14:13] = 11(2) (default)	140	175	210	s

(1) Devices participating in a transfer will timeout when any clock low exceeds the 25ms minimum timeout period. Devices that have detected a timeout condition must reset the communication no later than the 35 ms maximum timeout period. Both a master and a slave must adhere to the maximum value specified as it incorporates the cumulative stretch limit for both a master (10 ms) and a slave (25 ms).
(2) User can adjust threshold via SMBus ChargeOption() REG0x12.

7.7 Typical Characteristics

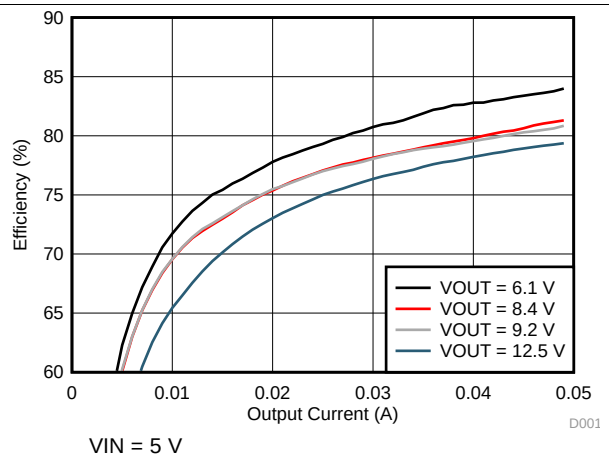

Figure 1. Light Load Efficiency

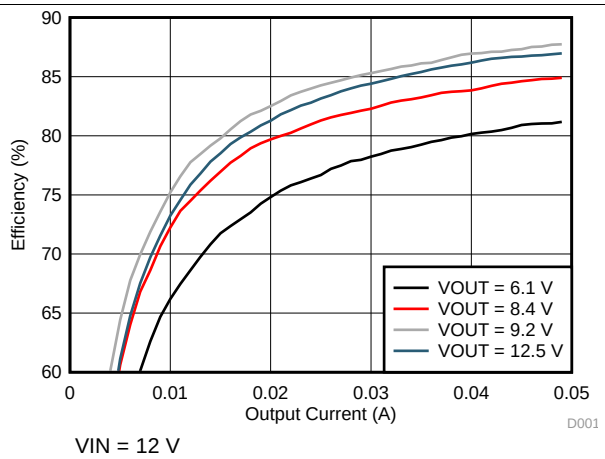

Figure 2. Light Load Efficiency

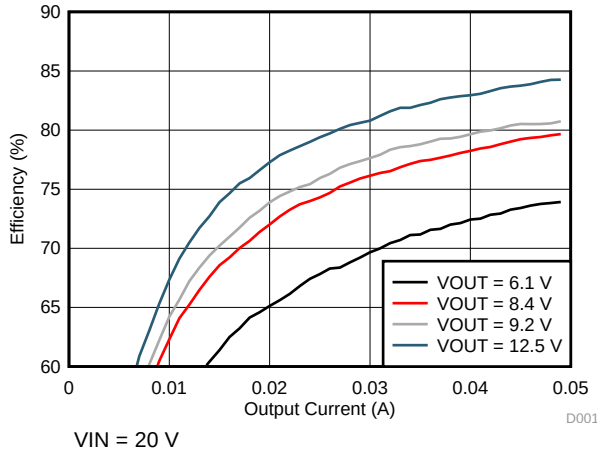

Figure 3. Light Load Efficiency

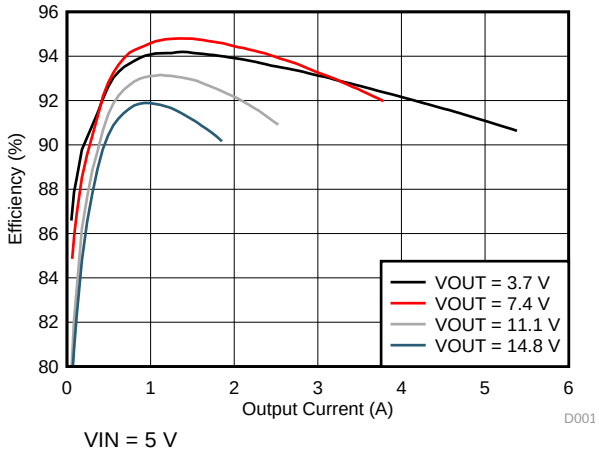

Figure 4. System Efficiency

Typical Characteristics (continued)

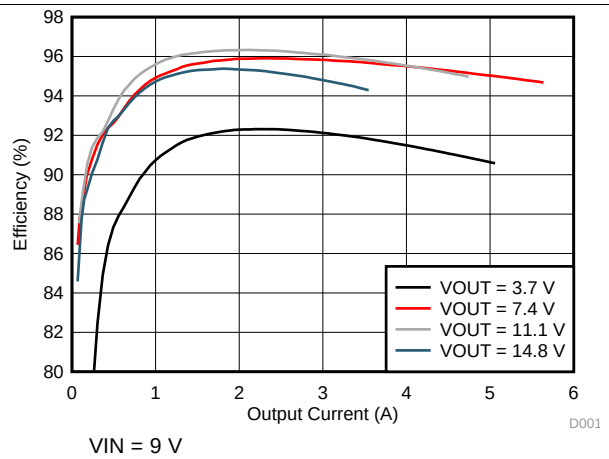

Figure 5. System Efficiency

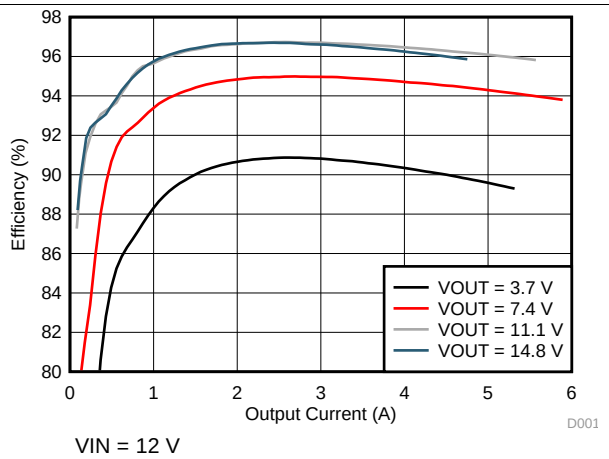

Figure 6. System Efficiency

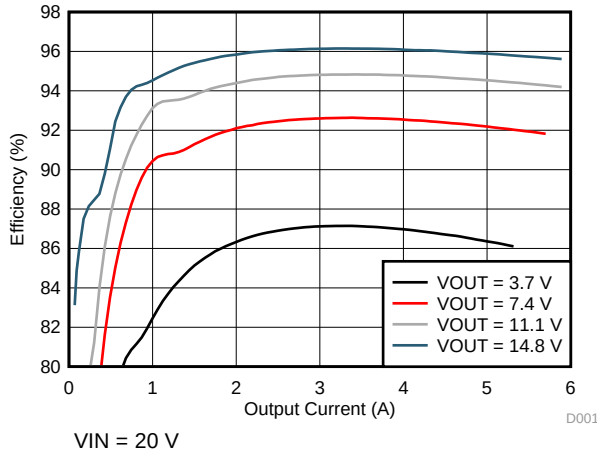

Figure 7. System Efficiency

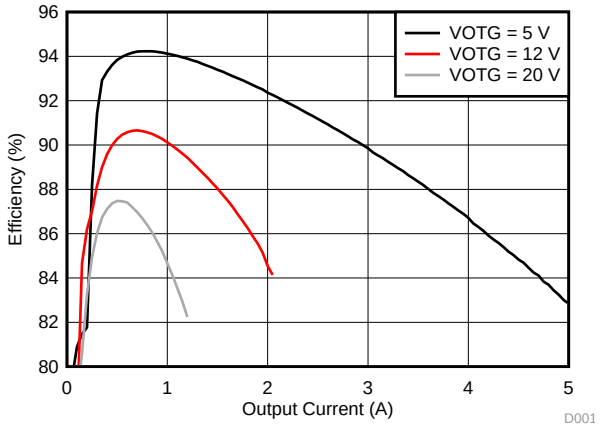

Figure 8. OTG Efficiency with 1S Battery

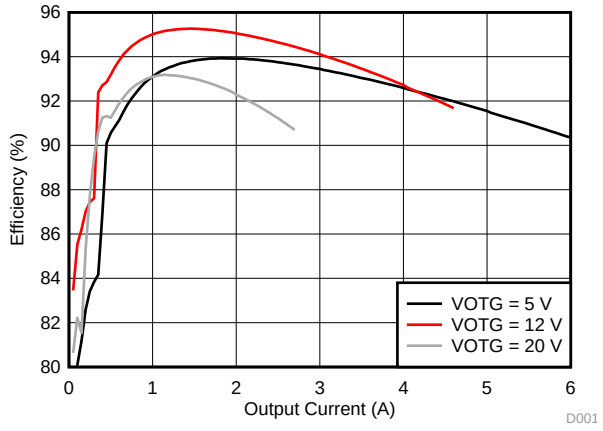

Figure 9. OTG Efficiency with 2S Battery

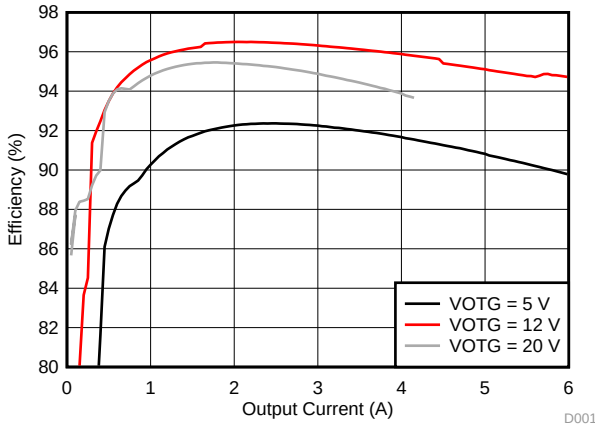

Figure 10. OTG Efficiency with 3S Battery

Copyright © 2017, Texas Instruments Incorporated

Typical Characteristics (continued)

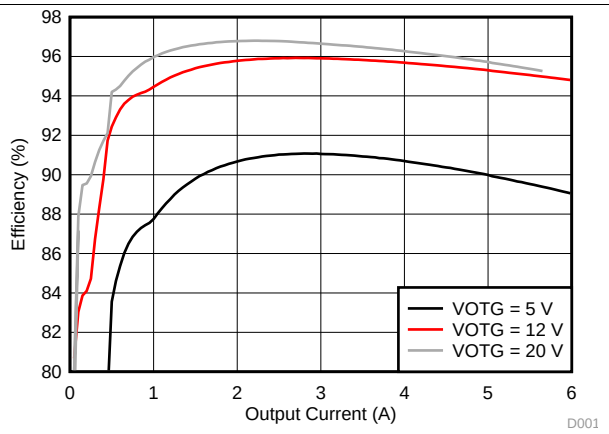

Figure 11. OTG Efficiency with 4S Battery

8 Detailed Description

8.1 Overview

The bq25700A is a buck boost NVDC (narrow voltage DC) charge controller for multi-chemistry portable applications such as notebook, detachable, ultrabook, tablet and other mobile devices with rechargeable batteries. It provides seamless transition between converter operation modes (buck, boost, or buck boost), fast transient response, and high light load efficiency.

The bq25700A supports wide range of power sources, including USB PD ports, legacy USB ports, traditional AC-DC adapters, etc. It takes input voltage from 3.5 V to 24 V, and charges battery of 1-4 series. It also supports USB On-The-Go (OTG) to provide 4.48V to 20.8V output at USB port.

The bq25700A features Dynamic Power Management (DPM) to limit the input power and avoid AC adapter overloading. During battery charging, as the system power increases, the charging current will reduce to maintain total input current below adapter rating. If system power demand temporarily exceeds adapter rating, the bq25700A supports NVDC architecture to allow battery discharge energy to supplement system power. For details, refer to *System Voltage Regulation* section.

In order to be compliant with Intel IMVP8 compliant system, the bq25700A includes PSYS function to monitor the total platform power from adapter and battery. Besides PSYS, it provides both an independent input current buffer (IADPT) and a battery current buffer (IBAT) with highly accurate current sense amplifiers. If the platform power exceeds the available power from adapter and battery, a PROCHOT signal is asserted to CPU so that the CPU optimizes its performance to the power available to the system.

The SMBus controls input current, charge current and charge voltage registers with high resolution, high accuracy regulation limits. It also sets the PROCHOT timing and threshold profile to meet system requirements.

Copyright © 2017, Texas Instruments Incorporated

8.2 Functional Block Diagram

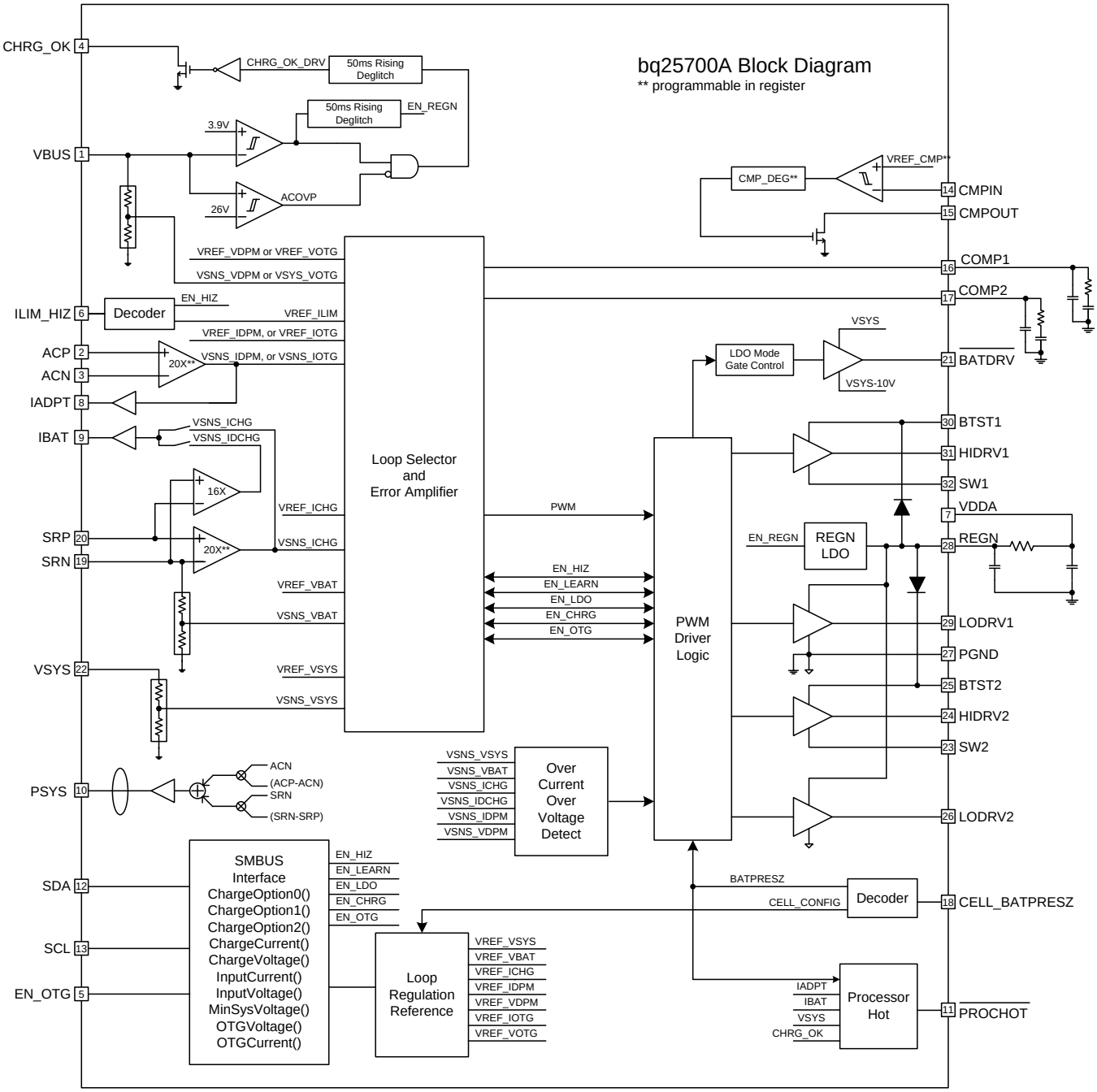

Copyright © 2017, Texas Instruments Incorporated

8.3 Feature Description

8.3.1 Power-Up from Battery Without DC Source

If only battery is present and the voltage is above V_{VBAT_UVLOZ}, the BATFET turns on and connects battery to system. By default, the charger is in low power mode (REG0x12[15] = 1) with lowest quiescent current. The LDO stays off. When device moves to performance mode (REG0x12[15] = 0), The host enables IBAT buffer through SMBus to monitor discharge current. For PSYS, PROCHOT or independent comparator, REGN LDO is enabled for an accurate reference.

8.3.2 Power-Up From DC Source

When an input source plugs in, the charger checks the input source voltage to turn on LDO and all the bias circuits. It sets the input current limit before the converter starts.

The power-up sequence from DC source is as follows:

1. 50 ms after VBUS above V_{VBUS_CONVEN}, enable 6 V LDO and CHRG_OK goes HIGH
2. Input voltage and current limit setup
3. Battery CELL configuration
4. 150 ms after VBUS above V_{VBUS_CONVEN}, converter powers up.

8.3.2.1 CHRG_OK Indicator

CHRG_OK is an active HIGH open drain indicator. It indicates the charger is in normal operation when the following conditions are valid:

- VBUS is above V_{VBUS_CONVEN}
- VBUS is below V_{ACOV}
- No MOSFET/inductor fault

8.3.2.2 Input Voltage and Current Limit Setup

After CHRG_OK goes HIGH, the charger sets default input current limit in REG0x3F() to 3.30 A. The actual input current limit is the lower setting of REG0x3F() and ILIM_HIZ pin.

Charger initiates a VBUS voltage measurement without load (VBUS at noLoad). The default VINDPM threshold is VBUS at noLoad – 1.28 V.

After input current and voltage limits are set, the charger device is ready to power up. The host can always update input current and voltage limit based on input source type.

8.3.2.3 Battery Cell Configuration

CELL_BATPRESZ pin is biased with resistors from REGN to CELL_BATPRESZ to GND. After VDDA LDO is activated, the device detects the battery configuration through CELL_BATPRESZ pin bias voltage. Refer to *Electrical Characteristics* for CELL setting thresholds.

Table 1. Battery Cell Configuration

CELL COUNT	PIN VOLTAGE w.r.t. VDDA	BATTERY VOLTAGE (REG0x15)	SYSOVP
4S	75%	16.800V	19.5V
3S	55%	12.592V	18.5V
2S	40%	8.400V	12V
1S	25%	4.192V	5V

8.3.2.4 Device Hi-Z State

The charger enters Hi-Z mode when ILIM_HIZ pin voltage is below 0.4 V or REG0x32[15] is set to 1. During Hi-Z mode, the input source is present, and the charger is in the low quiescent current mode with REGN LDO enabled.

Copyright © 2017, Texas Instruments Incorporated

8.3.3 USB On-The-Go (OTG)

The device supports USB OTG operation to deliver power from the battery to other portable devices through USB port. The OTG mode output voltage is set in REG0x3B(). The OTG mode output current is set in REG0x3C(). The OTG operation can be enabled if the conditions are valid:

- Valid battery voltage is set REG0x15()
- OTG output voltage is set in REG0x3B() and output current is set in REG0x3C()
- EN_OTG pin is HIGH and REG0x32[12] = 1
- VBUS is below V_{VBUS_UVLO}
- 10 ms after the above conditions are valid, converter starts and VBUS ramps up to target voltage. CHRG_OK pin goes HIGH if REG0x12[11] = 1.

8.3.4 Converter Operation

The charger employs a synchronous buck-boost converter that allows charging from a standard 5-V or a high-voltage power source. The charger operates in buck, buck-boost and boost mode. The buck-boost can operate uninterruptedly and continuously across the three operation modes.

Table 2. MOSFET Operation

MODE	BUCK	BUCK-BOOST	BOOST
Q1	Switching	Switching	ON
Q2	Switching	Switching	OFF
Q3	OFF	Switching	Switching
Q4	ON	Switching	Switching

8.3.4.1 Inductor Setting through IADPT Pin

The charger reads the inductor value through the IADPT pin.

Table 3. Inductor Setting on IADPT Pin

INDUCTOR IN USE	RESISTOR ON IADPT PIN
1 µH	93 kΩ
2.2 µH	137 kΩ
3.3 µH	169 kΩ

8.3.4.2 Continuous Conduction Mode (CCM)

With sufficient charge current, the inductor current does not cross 0, which is defined as CCM. The controller starts a new cycle with ramp coming up from 200 mV. As long as error amplifier output voltage is above the ramp voltage, the high-side MOSFET (HSFET) stays on. When the ramp voltage exceeds error amplifier output voltage, HSFET turns off and lowside MOSFET (LSFET) turns on. At the end of the cycle, ramp gets reset and LSFET turns off, ready for the next cycle. There is always break-before-make logic during transition to prevent cross-conduction and shoot-through. During the dead time when both MOSFETs are off, the body-diode of the low-side power MOSFET conducts the inductor current.

During CCM, the inductor current always flows and creates a fixed two-pole system. Having the LSFET turn-on keeps the power dissipation low and allows safe charging at high currents.

8.3.4.3 Pulse Frequency Modulation (PFM)

In order to improve converter light-load efficiency, the bq25700A switches to PFM control at light load when inductor current is less than 500 mA. The effective switching frequency will decrease accordingly when system load decreases. The minimum frequency can be limit to 25 kHz (ChargeOption0() bit[10]=1). To have higher light load efficiency, set EN_OOA bit low (Chargeoption0() bit[10] = 0).

Copyright © 2017, Texas Instruments Incorporated

8.3.5 Current and Power Monitor

8.3.5.1 High-Accuracy Current Sense Amplifier (IADPT and IBAT)

As an industry standard, a high-accuracy current sense amplifier (CSA) is used to monitor the input current during forward charging, or output current during OTG (IADPT) and the charge/discharge current (IBAT). IADPT voltage is 20× or 40× the differential voltage across ACP and ACN. IBAT voltage is 8x/16× (during charging), or 8×/16× (during discharging) of the differential across SRP and SRN. After input voltage or battery voltage is above UVLO, IADPT output becomes valid. To lower the voltage on current monitoring, a resistor divider from CSA output to GND can be used and accuracy over temperature can still be achieved.

- $V_{(IADPT)}$ = 20 or 40 × ($V_{(ACP)}$ – $V_{(ACN)}$) during forward mode, or 20 or 40 × ($V_{(ACN)}$ – $V_{(ACP)}$) during reverse OTG mode.
- $V_{(IBAT)}$ = 8 or 16 × ($V_{(SRP)}$ – $V_{(SRN)}$) during forward mode.
- $V_{(IBAT)}$ = 8 or 16 × ($V_{(SRN)}$ – $V_{(SRP)}$) during forward mode, or reverse OTG mode.

A maximum 100-pF capacitor is recommended to connect on the output for decoupling high-frequency noise. An additional RC filter is optional, if additional filtering is desired. Note that adding filtering also adds additional response delay. The CSA output voltage is clamped at 3.3 V.

8.3.5.2 High-Accuracy Power Sense Amplifier (PSYS)

The charger monitors total system power. During forward mode, the input adapter powers system. During reverse OTG mode, the battery powers the system and VBUS output. The ratio of PSYS current and total power K_{PSYS} can be programmed in REG0x30[9] with default 1 μA/W. The input and charge sense resistors (RAC and RSR) are programmed in REG0x30[11:10]. PSYS voltage can be calculated with Equation 1 where IIN>0 when adapter is in forward charging, and IBAT>0 when the battery is in discharge when the battery is in discharge.

$$V_{PSYS} = R_{PSYS} \times K_{PSYS} (V_{ACP} \times I_{IN} + V_{BAT} \times I_{BAT}) \quad (1)$$

For proper PSYS functionality, RAC and RSR values are limited to 10 mΩ and 20 mΩ.

8.3.6 Input Source Dynamic Power Manage

Refer to *Input Current and Input Voltage Registers for Dynamic Power Management*.

8.3.7 Two-Level Adapter Current Limit (Peak Power Mode)

Usually adapter can supply current higher than DC rating for a few milliseconds to tens of milliseconds. The charger employs two-level input current limit, or peak power mode, to fully utilize the overloading capability and minimize battery discharge during CPU turbo mode. Peak power mode is enabled in REG0x31[13]. The DC current limit, or I_{LIM1}, is the same as adapter DC current, set in REG0x3F(). The overloading current, or I_{LIM2}, is set in REG0x33[15:11], as in percentage of $I_{LIM1.}$

When the charger detects input current surge and battery discharge due to load transient, it applies I_{LIM2} for T_{OVLD} in REG0x31[15:14], first, and then I_{LIM1} for up to T_{MAX} – T_{OVLD} time. T_{MAX} is programmed in REG0x31[9:8]. After $T_{MAX,}$ if the load is still high, another peak power cycle starts. Charging is disabled during $T_{MAX,}$; once $T_{MAX,}$ expires, charging continues.

Copyright © 2017, Texas Instruments Incorporated

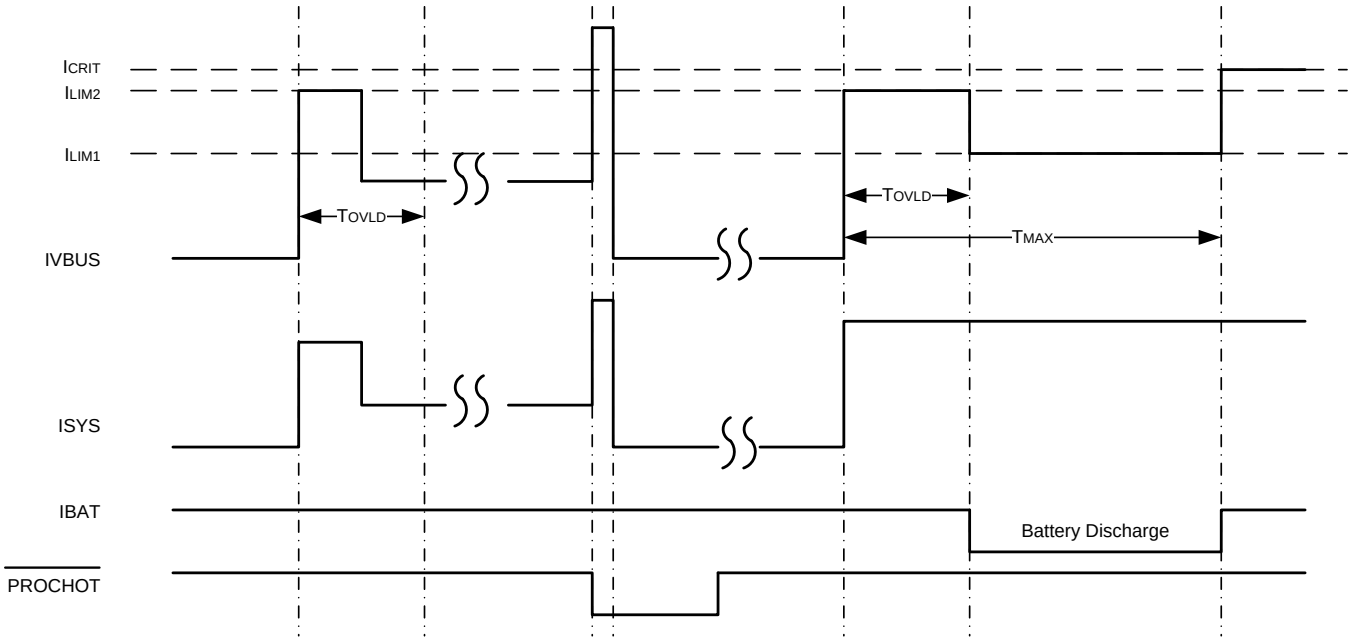

Figure 12. Two-Level Adapter Current Limit Timing Diagram

8.3.8 Processor Hot Indication

When CPU is running turbo mode, the system peak power may exceed available power from adapter and battery together. The adapter current and battery discharge peak current, or system voltage drop is indications that system power are too high. The charger processor hot function monitors these events, and $\overline{\text{PROCHOT}}$ pulse is asserted. Once CPU receives $\overline{\text{PROCHOT}}$ pulse from charger, it slows down to reduce system power. The processor hot function monitors these events, and $\overline{\text{PROCHOT}}$ pulse is asserted.

The $\overline{\text{PROCHOT}}$ triggering events include:

- ICRIT: adapter peak current, as 110% of I_{LIM2}
- INOM: adapter average current (110% of input current limit)
- IDCHG: battery discharge current
- VSYS: system voltage on VSYS
- Adapter Removal: upon adapter removal (CHRG_OK pin HIGH to LOW)
- Battery Removal: upon battery removal (CELL_BATPRESZ pin goes LOW)
- CMPOUT: Independent comparator output (CMPOUT pin HIGH to LOW)

The threshold of ICRIT, IDCHG or VSYS, and the deglitch time of ICRIT, INOM, IDCHG or CMPOUT are programmable through SMBus. Each triggering event can be individually enabled in REG0x34[6:0]. When any event in $\overline{\text{PROCHOT}}$ profile is triggered, $\overline{\text{PROCHOT}}$ is asserted low for minimum 10 ms programmable in 0x33[4:3]. At the end of the 10 ms, if the $\overline{\text{PROCHOT}}$ event is still active, the pulse gets extended.

Copyright © 2017, Texas Instruments Incorporated

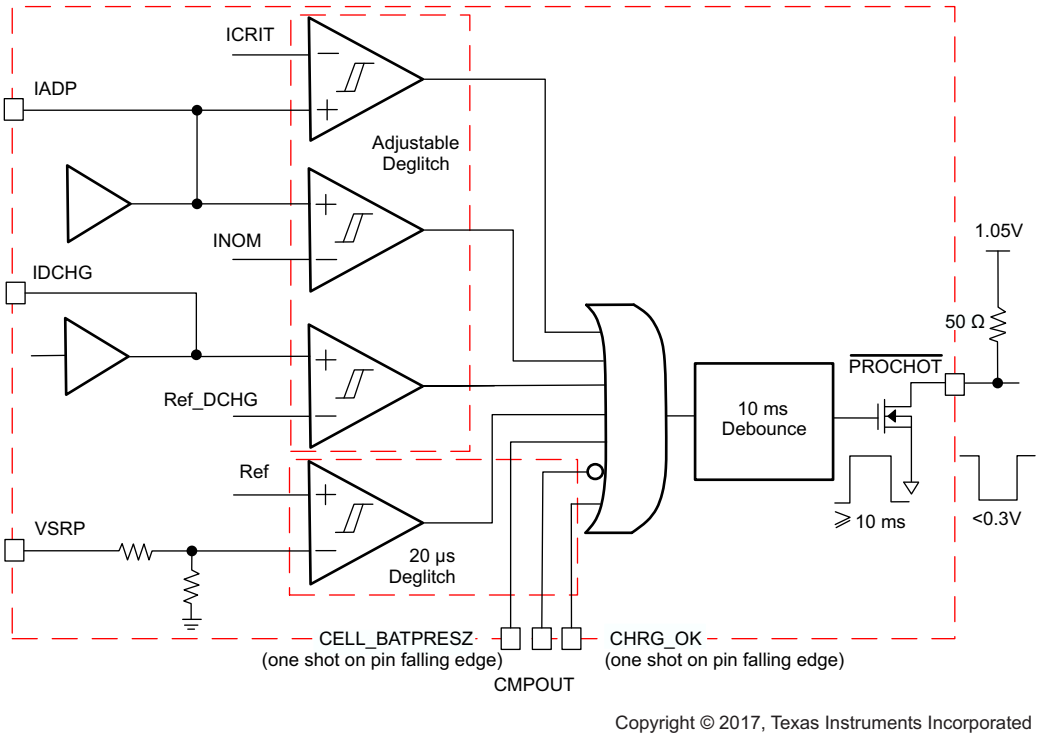

Figure 13. $\overline{\text{PROCHOT}}$ Profile

8.3.8.1 $\overline{\text{PROCHOT}}$ During Low Power Mode

During low power mode (REG0x12[15] = 1), the charger offers a low quiescent current (~150 µA) Low power $\overline{\text{PROCHOT}}$ function uses the independent comparator to monitor battery discharge current and system voltage, and assert $\overline{\text{PROCHOT}}$ to CPU.

Below lists the register setting to enable $\overline{\text{PROCHOT}}$ during low power mode.

- REG0x12[15] = 1
- REG0x34[5:0] = 000000
- REG0x30[6:4] = 100
- Independent comparator threshold is always 1.2 V
- When REG0x30[14] = 1, charger monitors discharge current. Connect CMPIN to voltage proportional to IBAT pin. $\overline{\text{PROCHOT}}$ triggers from HIGH to LOW when CMPIN voltage falls below 1.2 V.
- When REG0x30[13] = 1, charger monitors system voltage. Connect CMPIN to voltage proportional to system. $\overline{\text{PROCHOT}}$ triggers from HIGH to LOW when CMPIN voltage rises above 1.2 V.

Copyright © 2017, Texas Instruments Incorporated

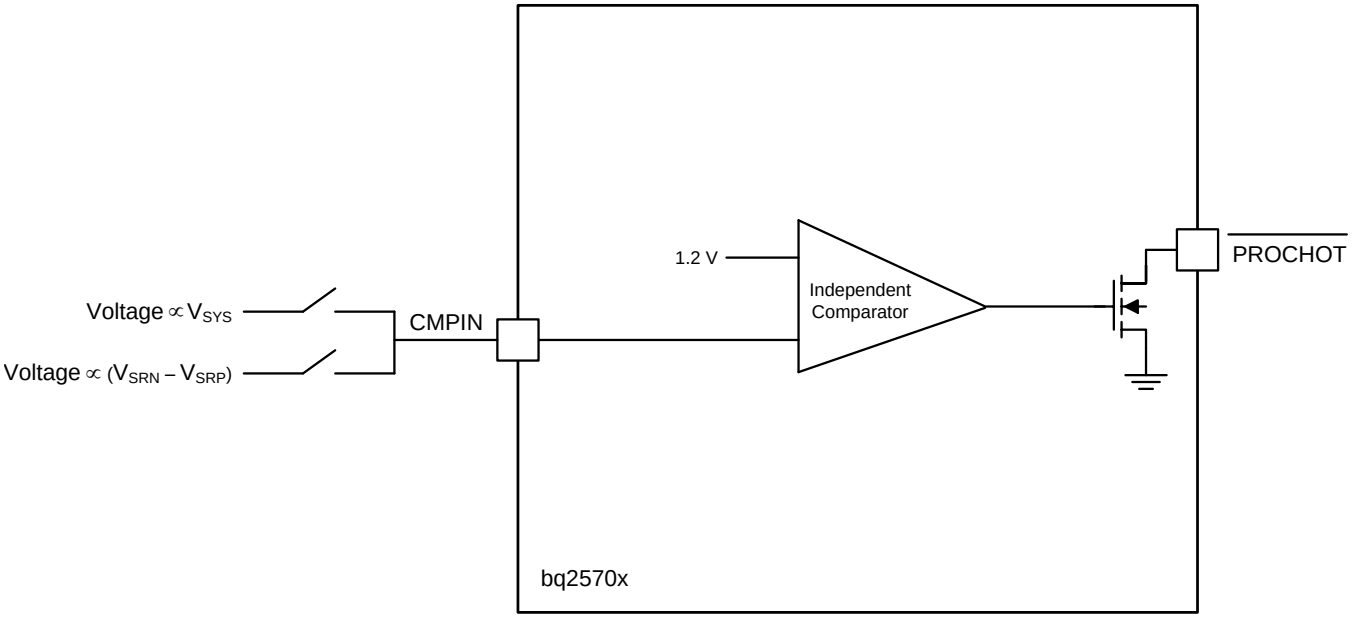

Copyright © 2017, Texas Instruments Incorporated

Figure 14. $\overline{\text{PROCHOT}}$ Low Power Mode Implementation

8.3.8.2 $\overline{\text{PROCHOT}}$ Status

REG0x21[6:0] reports which event in the profile triggers $\overline{\text{PROCHOT}}$ by setting the corresponding bit to 1. The status bit can be reset back to 0 after it is read by host, and current PROCHOT event is no longer active.

Assume there are two $\overline{\text{PROCHOT}}$ events, event A and event B. Event A triggers $\overline{\text{PROCHOT}}$ first, but event B is also active. Both status bits will be HIGH. At the end of the 10 ms $\overline{\text{PROCHOT}}$ pulse, if PROCHOT is still active (either by A or B), the PROCHOT pulse is extended.

8.3.9 Device Protection

8.3.9.1 Watchdog Timer

The charger includes watchdog timer to terminate charging if the charger does not receive a write MaxChargeVoltage() or write ChargeCurrent() command within 175 s (adjustable via REG0x12[14:13]). When watchdog timeout occurs, all register values are kept unchanged except ChargeCurrent() resets to zero. Battery charging is suspended. Write MaxChargeVoltage() or write ChargeCurrent() commands must be re-sent to reset watchdog timer and resume charging. Writing REG0x12[14:13] = 00 to disable watchdog timer also resumes charging.

8.3.9.2 Input Overvoltage Protection (ACOV)

The charger has fixed ACOV voltage. When VBUS pin voltage is higher than ACOV, it is considered as adapter over voltage. CHRG_OK will be pulled low, and converter will be disabled. As system falls below battery voltage, BATFET will be turned on. When VBUS pin voltage falls below ACOV, it is considered as adapter voltage returns back to normal voltage. CHRG_OK is pulled high by external pull up resistor. The converter resumes if enable conditions are valid.

8.3.9.3 Input Overcurrent Protection (ACOC)

If the input current exceeds the 1.25× or 2× (REG0x31[2]) of I_{LIM2}_VTH (REG0x33[15:11]) set point, converter stops switching. After 300 ms, converter starts switching again.

8.3.9.4 System Overvoltage Protection (SYSOVP)

When the converter starts up, the bq25700 reads CELL pin configuration and sets MaxChargeVoltage() and SYSOVP threshold (1s – 5 V, 2s – 12 V, 3s – 18.5 V, 4s – 19.5V). Before REGx15() is written by the host, the battery configuration will change with CELL pin voltage. When SYSOVP happens, the device latches off the converter. REG20[4] is set as 1. The user can clear latch-off by either writing 0 to the SYSOVP bit or removing and plugging in the adapter again. After latch-off is cleared, the converter starts again.

8.3.9.5 Battery Overvoltage Protection (BATOVP)

Battery over-voltage may happen when battery is removed during charging or the user plugs in a wrong battery. The BATOVP threshold is 104% (1 s) or 102% (2 s to 4 s) of regulation voltage set in REG0x15().

8.3.9.6 Battery Short

If BAT voltage falls below SYSMIN during charging, the maximum current is limited to 384 mA.

8.3.9.7 Thermal Shutdown (TSHUT)

The WQFN package has low thermal impedance, which provides good thermal conduction from the silicon to the ambient, to keep junction temperatures low. As added level of protection, the charger converter turns off for self-protection whenever the junction temperature exceeds the 155°C. The charger stays off until the junction temperature falls below 135°C. During thermal shut down, the LDO current limit is reduced to 16 mA and REGN LDO stays off. When the temperature falls below 135°C, charge can be resumed with soft start.

8.4 Device Functional Modes

8.4.1 Forward Mode

When input source is connected to VBUS, bq25700A is in forward mode to regulate system and charge battery.

8.4.1.1 System Voltage Regulation with Narrow VDC Architecture

The bq25700A employs Narrow VDC architecture (NVDC) with BATFET separating system from battery. The minimum system voltage is set by MinSystemVoltage(). Even with a deeply depleted battery, the system is regulated above the minimum system voltage.

When the battery is below minimum system voltage setting, the BATFET operates in linear mode (LDO mode).

As the battery voltage rises above the minimum system voltage, BATFET is fully on when charging or in supplement mode and the voltage difference between the system and battery is the VDS of BATFET. System voltage is regulated 160 mV above battery voltage when BATFET is off (no charging or no supplement current).

See *System Voltage Regulation* for details on system voltage regulation and register programming.

8.4.1.2 Battery Charging

The bq25700A charges 1-4 cell battery in constant current (CC), and constant voltage (CV) mode. Based on CELL_BATPREZ pin setting, the charger sets default battery voltage 4.2V/cell to ChargeVoltage(), or REG0x15(). According to battery capacity, the host programs appropriate charge current to ChargeCurrent(), or 0x14(). When battery is full or battery is not in good condition to charge, host terminates charge by setting 0x12[0] to 1, or setting ChargeCurrent() to zero.

See *Feature Description* for details on register programming.

8.4.2 USB On-The-Go

The bq25700A supports USB OTG functionality to deliver power from the battery to other portable devices through USB port (reverse mode). The OTG output voltage is compliant with USB PD specification, including 5 V, 9 V, 15 V, and 20 V (REG0x3B()). The output current regulation is compliant with USB type C specification, including 500 mA, 1.5 A, 3 A and 5 A (REG0x3C()).

Similar to forward operation, the device switches from PWM operation to PFM operation at light load to improve efficiency.

Copyright © 2017, Texas Instruments Incorporated

8.5 Programming

The charger supports battery-charger commands that use either Write-Word or Read-Word protocols, as summarized in . The SMBUS address is 12h (0001001_X), where X is the read/write bit. The ManufacturerID and DeviceID registers are assigned identify the charger device. The ManufacturerID register command always returns 40h.

8.5.1 SMBus Interface

The bq25700A device operates as a slave, receiving control inputs from the embedded controller host through the SMBus interface. The bq25700A device uses a simplified subset of the commands documented in *System Management Bus Specification V1.1*, which can be downloaded from www.smbus.org. The bq25700A device uses the SMBus read-word and write-word protocols (shown in Table 4 and Table 5) to communicate with the smart battery. The device performs only as a SMBus slave device with address 0b00010010 (0x12H) and does not initiate communication on the bus. In addition, the device has two identification registers, a 16-bit device ID register (0xFFH) and a 16-bit manufacturer ID register (0xFEH).

SMBus communication starts when VCC is above $V_{(UVLO)}$.

The data (SDA) and clock (SCL) pins have Schmitt-trigger inputs that can accommodate slow edges. Choose pullup resistors (10 kΩ) for SDA and SCL to achieve rise times according to the SMBus specifications. Communication starts when the master signals a start condition, which is a high-to-low transition on SDA, while SCL is high. When the master has finished communicating, the master issues a stop condition, which is a low-to-high transition on SDA, while SCL is high. The bus is then free for another transmission. Figure 15 and Figure 16 show the timing diagram for signals on the SMBus interface. The address byte, command byte, and data bytes are transmitted between the start and stop conditions. The SDA state changes only while SCL is low, except for the start and stop conditions. Data is transmitted in 8-bit bytes and is sampled on the rising edge of SCL. Nine clock cycles are required to transfer each byte in or out of the device because either the master or the slave acknowledges the receipt of the correct byte during the ninth clock cycle. The bq25700A supports the charger commands listed in Table 4.

Programming (continued)

8.5.1.1 SMBus Write-Word and Read-Word Protocols

Table 4. Write-Word Format

S (1)(2)	SLAVE ADDRESS (1)	W (1)(3)	ACK (4)(5)	COMMAND BYTE (1)	ACK (4)(5)	LOW DATA BYTE (1)	ACK (4)(5)	HIGH DATA BYTE (1)	ACK (4)(5)	P (1)(6)
	7 bits	1b	1b	8 bits	1b	8 bits	1b	8 bits	1b	
	MSB LSB	0	0	MSB LSB	0	MSB LSB	0	MSB LSB	0	

(1) Master to slave
(2) S = Start condition or repeated start condition
(3) W = Write bit (logic-low)
(4) Slave to master (shaded gray)
(5) ACK = Acknowledge (logic-low)
(6) P = Stop condition

Table 5. Read-Word Format

S (1)(2)	SLAVE ADDRESS (1)	W (1)(3)	ACK (4)(5)	COMMAND BYTE (1)	ACK (4)(5)	S (1)(2)	SLAVE ADDRESS (1)	R (1)(6)	ACK (4)(5)	LOW DATA BYTE (4)	ACK (1)(5)	HIGH DATA BYTE (4)	NACK (1)(7)	P (1)(8)
	7 bits	1b	1b	8 bits	1b		7 bits	1b	1b	8 bits	1b	8 bits	1b	
	MSB LSB	0	0	MSB LSB	0		MSB LSB	1	0	MSB LSB	0	MSB LSB	1	

(1) Master to slave
(2) S = Start condition or repeated start condition
(3) W = Write bit (logic-low)
(4) Slave to master (shaded gray)
(5) ACK = Acknowledge (logic-low)
(6) R = Read bit (logic-high)
(7) NACK = Not acknowledge (logic-high)
(8) P = Stop condition

8.5.1.2 Timing Diagrams

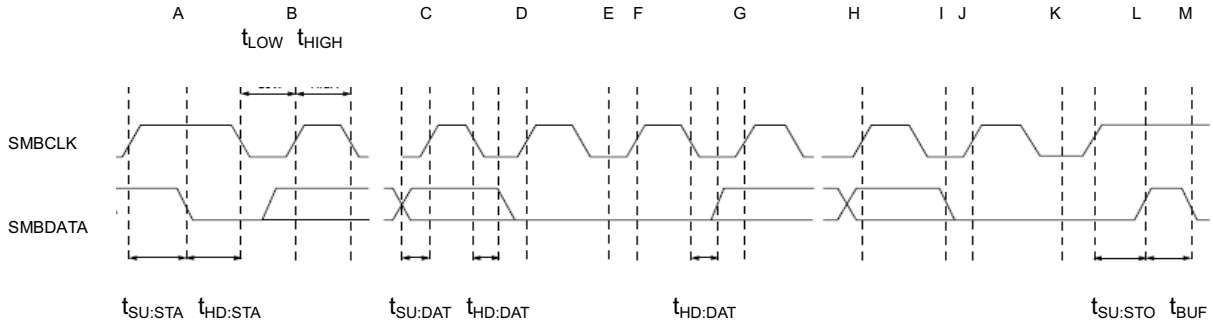

A = Start condition
B = MSB of address clocked into slave
C = LSB of address clocked into slave
D = R/W bit clocked into slave
E = Slave pulls SMBDATA line low
F = ACKNOWLEDGE bit clocked into master
G = MSB of data clocked into slave
H = LSB of data clocked into slave
I = Slave pulls SMBDATA line low
J = Acknowledge clocked into master
K = Acknowledge clock pulse
L = Stop condition, data executed by slave
M = New start condition

Figure 15. SMBus Write Timing

Copyright © 2017, Texas Instruments Incorporated

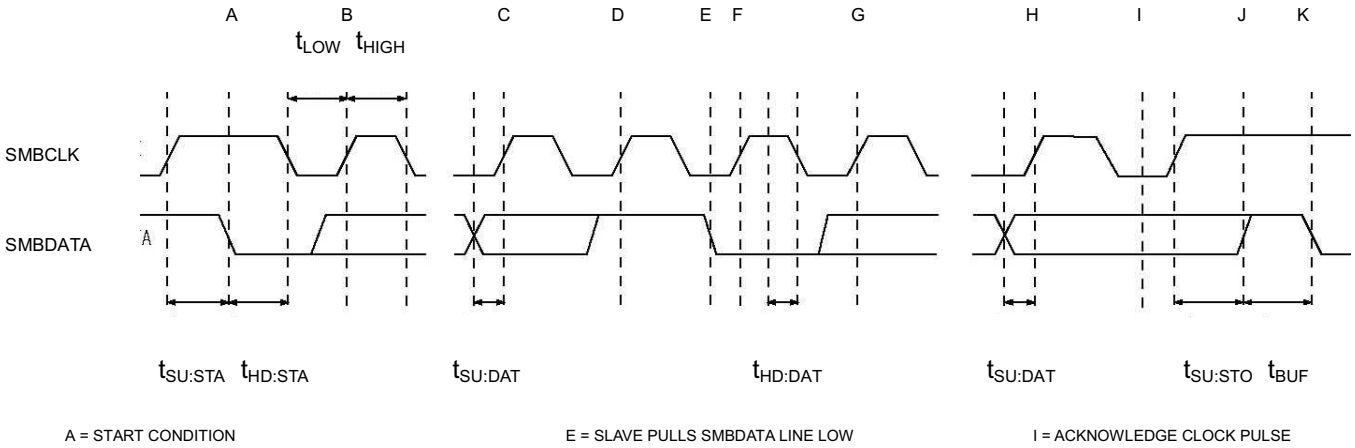

A = Start condition
B = MSB of address clocked into slave
C = LSB of address clocked into slave
D = R/W bit clocked into slave
E = Slave pulls SMBDATA line low
F = ACKNOWLEDGE bit clocked into master
G = MSB of data clocked into master
H = LSB of data clocked into master
I = Acknowledge clock pulse
J = Stop condition
K = New start condition

Figure 16. SMBus Read Timing

8.6 Register Map

Table 6. Charger Command Summary

SMBus ADDR	REGISTER NAME	TYPE	DESCRIPTION	LINKS
12h	ChargeOption0()	R/W	Charge Option 0	Go
14h	ChargeCurrent()	R/W	7-bit charge current setting LSB 64 mA, Range 8128 mA	Go
15h	MaxChargeVoltage()	R/W	11-bit charge voltage setting LSB 16 mV, Default: 1S-4192mV, 2S-8400mV, 3S-12592mV, 4S-16800mV	Go
30h	ChargeOption1()	R/W	Charge Option 1	Go
31h	ChargeOption2()	R/W	Charge Option 2	Go
32h	ChargeOption3()	R/W	Charge Option 3	Go
33h	ProchotOption0()	R/W	$\overline{\text{PROCHOT}}$ Option 0	Go
34h	ProchotOption1()	R/W	$\overline{\text{PROCHOT}}$ Option 1	Go
35h	ADCOption()	R/W	ADC Option	Go
20h	ChargerStatus()	R	Charger Status	Go
21h	ProchotStatus()	R	Prochot Status	Go
22h	IIN_DPM()	R	7-bit input current limit in use LSB: 50 mA, Range: 50 mA - 6400 mA	Go
23h	ADCVBUS/PSYS()	R	8-bit digital output of input voltage, 8-bit digital output of system power PSYS: Full range: 3.06 V, LSB: 12 mV VBUS: Full range: 3.2 V - 19.52 V, LSB 64 mV	Go
24h	ADCIBAT()	R	8-bit digital output of battery charge current, 8-bit digital output of battery discharge current ICHG: Full range 8.128 A, LSB 64 mA IDCHG: Full range: 32.512 A, LSB: 256 mA	Go

Copyright © 2017, Texas Instruments Incorporated

Register Map (continued)

Table 6. Charger Command Summary (continued)

SMBus ADDR	REGISTER NAME	TYPE	DESCRIPTION	LINKS
25h	ADCIINCMPIN()	R	8-bit digital output of input current, 8-bit digital output of CMPIN voltage POR State - IIN: Full range: 12.75 A, LSB 50 mA CMPIN: Full range 3.06 V, LSB: 12 mV	Go
26h	ADCVSYSVBAT()	R	8-bit digital output of system voltage, 8-bit digital output of battery voltage VSYS: Full range: 2.88 V - 19.2 V, LSB: 64 mV VBAT: Full range : 2.88 V - 19.2 V, LSB 64 mV	Go
3Bh	OTGVoltage()	R/W	8-bit OTG voltage setting LSB 64 mV, Range: 4480 – 20800 mV	Go
3Ch	OTGCurrent()	R/W	7-bit OTG output current setting LSB 50 mA, Range: 0 A – 6350 mA	Go
3Dh	InputVoltage()	R/W	8-bit input voltage setting LSB 64 mV, Range: 3200 mV – 19520 mV	Go
3Eh	MinSystemVoltage()	R/W	6-Bit minimum system voltage setting LSB: 256 mV, Range: 1024 mV - 16182 mV Default: 1S-3.584V, 2S-6.144V, 3S-9.216V, 4S-12.288V	Go
3Fh	IIN_HOST()	R/W	6-bit Input current limit set by host LSB: 50 mA, Range: 0 mA - 6350 mA	Go
FEh	ManufacturerID()	R	Manufacturer ID - 0x0040H	Go
FFh	DeviceAddress()	R	Device Address ID	Go

Copyright © 2017, Texas Instruments Incorporated

8.6.1 Setting Charge and PROCHOT Options

8.6.1.1 ChargeOption0 Register (SMBus address = 12h) [reset = E20Eh]

Figure 17. ChargeOption0 Register (SMBus address = 12h) [reset = E20Eh]

15	14	13	12	11	10	9	8
EN_LWPWR	WDTMR_ADJ		IDPM_AUTO_ DISABLE	OTG_ON_ CHRGOK	EN_OOA	PWM_FREQ	Reserved
R/W	R/W		R/W	R/W	R/W	R/W	R/W
7	6	5	4	3	2	1	0
Reserved		EN_LEARN	IADPT_GAIN	IBAT_GAIN	EN_LDO	EN_IDPM	CHRG_INHIBIT
R/W		R/W	R/W	R/W	R/W	R/W	R/W

LEGEND: R/W = Read/Write; R = Read only; -n = value after reset

Table 7. ChargeOption0 Register (SMBus address = 12h) Field Descriptions

SMBus BIT	FIELD	TYPE	RESET	DESCRIPTION
15	EN_LWPWR	R/W	1b	Low Power Mode Enable 0b: Disable Low Power Mode. Device in performance mode with battery only. The PROCHOT, current/power monitor buffer and comparator follow register setting. 1b: Enable Low Power Mode. Device in low power mode with battery only for lowest quiescent current. PROCHOT, discharge current monitor buffer, power monitor buffer and independent comparator are disabled. ADC is not available in Low Power Mode. Independent comparator can be enabled by setting either REG0X30()[14] or [13] to 1. <default at POR>
14-13	WDTMR_ADJ	R/W	11b	WATCHDOG Timer Adjust Set maximum delay between consecutive SMBus write of charge voltage or charge current command. If device does not receive a write on the REG0x15() or the REG0x14() within the watchdog time period, the charger will be suspended by setting the REG0x14() to 0 mA. After expiration, the timer will resume upon the write of REG0x14(), REG0x15() or REG0x12[14:13]. The charger will resume if the values are valid. 00b: Disable Watchdog Timer 01b: Enabled, 5 sec 10b: Enabled, 88 sec 11b: Enable Watchdog Timer, 175 sec <default at POR>
12	IDPM_AUTO_ DISABLE	R/W	0b	IDPM Auto Disable When CELL_BATPRESZ pin is LOW, the charger automatically disables the IDPM function by setting EN_IDPM (REG0x12[1]) to 0. The host can enable IDPM function later by writing EN_IDPM bit (REG0x12[1]) to 1. 0b: Disable this function. IDPM is not disabled when CELL_BATPRESZ goes LOW. <default at POR> 1b: Enable this function. IDPM is disabled when CELL_BATPRESZ goes LOW.
11	OTG_ON_ CHRGOK	R/W	0b	Add OTG to CHRG_OK Drive CHRG_OK to HIGH when the device is in OTG mode. 0b: Disable <default at POR> 1b: Enable
10	EN_OOA	R/W	0b	Out-of-Audio Enable 0b: No limit of PFM burst frequency <default at POR> 1b: Set minimum PFM burst frequency to above 25 kHz to avoid audio noise

Table 7. ChargeOption0 Register (SMBus address = 12h) Field Descriptions (continued)

SMBus BIT	FIELD	TYPE	RESET	DESCRIPTION
9	PWM_FREQ	R/W	1b	Switching Frequency Two converter switching frequencies. One for small inductor and the other for big inductor. Recommend 800 kHz with 2.2 µH or 3.3 µH, and 1.2 MHz with 1 µH or 1.5 µH. 0b: 1200 kHz 1b: 800 kHz <default at POR>
8	Reserved	R/W	0b	Reserved

Table 8. ChargeOption0 Register (SMBus address = 12h) Field Descriptions

SMBus BIT	FIELD	TYPE	RESET	DESCRIPTION
7-6	Reserved	R/W	00b	Reserved
5	EN_LEARN	R/W	0b	LEARN function allows the battery to discharge while the adapter is present. It calibrates the battery gas gauge over a complete discharge/charge cycle. When the battery voltage is below battery depletion threshold, the system switches back to adapter input by the host. When CELL_BATPRESZ pin is LOW, the device exits LEARN mode and this bit is set back to 0. 0b: Disable LEARN Mode <default at POR> 1b: Enable LEARN Mode
4	IADPT_GAIN	R/W	0b	IADPT Amplifier Ratio The ratio of voltage on IADPT and voltage across ACP and ACN. 0b: 20× <default at POR> 1b: 40×
3	IBAT_GAIN	R/W	1b	IBAT Amplifier Ratio 0b: 8× 1b: 16× <default at POR>
2	EN_LDO	R/W	1b	LDO Mode Enable When battery voltage is below minimum system voltage (REG0x3E()), the charger is in pre-charge with LDO mode enabled. 0b: Disable LDO mode, BATFET fully ON. Precharge current is set by battery pack LDO. The system is regulated by the MaxChargeVoltage register. 1b: Enable LDO mode, Precharge current is set by the ChargeCurrent register and clamped below 384 mA (2 cell – 4 cell) or 2A (1 cell). The system is regulated by the MinSystemVoltage register. <default at POR>
1	EN_IDPM	R/W	1b	IDPM Enable Host writes this bit to enable IDPM regulation loop. When the IDPM is disabled by the charger (refer to IDPM_AUTO_DISABLE), this bit goes LOW. 0b: IDPM disabled 1b: IDPM enabled <default at POR>
0	CHRG_INHIBIT	R/W	0b	Charge Inhibit When this bit is 0, battery charging will start with valid values in the MaxChargeVoltage register and the ChargeCurrent register. 0b: Enable Charge <default at POR> 1b: Inhibit Charge

Copyright © 2017, Texas Instruments Incorporated

8.6.1.2 ChargeOption1 Register (SMBus address = 30h) [reset = 211h]

Figure 18. ChargeOption1 Register (SMBus address = 30h) [reset = 211h]

15	14	13	12	11	10	9	8
EN_IBAT	EN_PROCHOT_LPWR		EN_PSYS	RSNS_RAC	RSNS_RSR	PSYS_RATIO	Reserved
R/W	R/W		R/W	R/W	R/W	R/W	R/W
7	6	5	4	3	2	1	0
CMP_REF	CMP_POL	CMP_DEG		FORCE_ LATCHOFF	Reserved	EN_SHIP_ DCHG	AUTO_ WAKEUP_EN
R/W	R/W	R/W		R/W	R/W	R/W	R/W

LEGEND: R/W = Read/Write; R = Read only; -n = value after reset

Table 9. ChargeOption1 Register (SMBus address = 30h) Field Descriptions

SMBus BIT	FIELD	TYPE	RESET	DESCRIPTION
15	EN_IBAT	R/W	0b	IBAT Enable Enable the IBAT output buffer. In low power mode (REG0x12[15] = 1), IBAT buffer is always disabled regardless of this bit value. 0b Turn off IBAT buffer to minimize Iq <default at POR> 1b: Turn on IBAT buffer
14-13	EN_PROCHOT _LPWR	R/W	00b	Enable $\overline{\text{PROCHOT}}$ during battery only low power mode With battery only, enable IDCHG or VSYS in $\overline{\text{PROCHOT}}$ with low power consumption. Do not enable this function with adapter present. Refer to *PROCHOT During Low Power Mode* for more details. 00b: Disable low power $\overline{\text{PROCHOT}}$ <default at POR> 01b: Enable IDCHG low power $\overline{\text{PROCHOT}}$ 10b: Enable VSYS low power $\overline{\text{PROCHOT}}$ 11b: Reserved
12	EN_PSYS	R/W	0b	PSYS Enable Enable PSYS sensing circuit and output buffer (whole PSYS circuit). In low power mode (REG0x12[15] = 1), PSYS sensing and buffer are always disabled regardless of this bit value. 0b: Turn off PSYS buffer to minimize Iq <default at POR> 1b: Turn on PSYS buffer
11	RSNS_RAC	R/W	0b	Input sense resistor RAC 0b: 10 mΩ <default at POR> 1b: 20 mΩ
10	RSNS_RSR	R/W	0b	Charge sense resistor RSR 0b: 10 mΩ <default at POR> 1b: 20 mΩ
9	PSYS_RATIO	R/W	1b	PSYS Gain Ratio of PSYS output current vs total input and battery power with 10-mΩ sense resistor. 0b: 0.25 µA/W 1b: 1 µA/W <default at POR>
8	Reserved	R/W	0b	Reserved

Table 10. ChargeOption1 Register (SMBus address = 30h) Field Descriptions

SMBus BIT	FIELD	TYPE	RESET	DESCRIPTION
7	CMP_REF	R/W	0b	Independent Comparator Reference Independent comparator internal reference. 0b: 2.3 V <default at POR> 1b: 1.2 V

Table 10. ChargeOption1 Register (SMBus address = 30h) Field Descriptions (continued)

SMBus BIT	FIELD	TYPE	RESET	DESCRIPTION
6	CMP_POL	R/W	0b	Independent Comparator Polarity Independent comparator output polarity 0b: When CMPIN is above internal threshold, CMPOUT is LOW (internal hysteresis) <default at POR> 1b: When CMPIN is below internal threshold, CMPOUT is LOW (external hysteresis)
5-4	CMP_DEG	R/W	01b	Independent Comparator Deglitch Time Independent comparator deglitch time, only applied to the falling edge of CMPOUT (HIGH → LOW). 00b: Independent comparator is disabled 01b: Independent comparator is enabled with output deglitch time 1 µs <default at POR> 10b: Independent comparator is enabled with output deglitch time of 2 ms 11b: Independent comparator is enabled with output deglitch time of 5 sec
3	FORCE_LATCHOFF	R/W	0b	Force Power Path Off When comparator triggers, charger turns off Q1 and Q4 (same as disable converter) so that the system is disconnected from the input source. At the same time, CHRG_OK signal goes to LOW to notify the system. 0b: Disable this function <default at POR> 1b: Enable this function
2	Reserved	R/W	0b	Reserved
1	EN_SHIP_DCHG	R/W	0b	Discharge SRN for Shipping Mode When this bit is 1, discharge SRN pin down below 3.8 V in 140 ms. When 140 ms is over, this bit is reset to 0. 0b: Disable shipping mode <default at POR> 1b: Enable shipping mode
0	AUTO_WAKEUP_EN	R/W	1b	Auto Wakeup Enable When this bit is HIGH, if the battery is below minimum system voltage (REG0x3E()), the device will automatically enable 128 mA charging current for 30 mins. When the battery is charged up above minimum system voltage, charge will terminate and the bit is reset to LOW. 0b: Disable 1b: Enable <default at POR>

Copyright © 2017, Texas Instruments Incorporated

8.6.1.3 ChargeOption2 Register (SMBus address = 31h) [reset = 2B7]

Figure 19. ChargeOption2 Register (SMBus address = 31h) [reset = 2B7]

15	14	13	12	11	10	9	8
PKPWR_TOVLD_DEG		EN_PKPWR_ IDPM	EN_PKPWR_ VSYS	PKPWR_ OVLD_STAT	PKPWR_ RELAX_STAT	PKPWR_TMAX[1:0]	
R/W		R/W	R/W	R/W	R/W	R/W	
7	6	5	4	3	2	1	0
EN_EXTILIM	EN_ICHG _IDCHG	Q2_OCP	ACX_OCP	EN_ACOC	ACOC_VTH	EN_BATOC	BATOC_VTH
R/W	R/W	R/W	R/W	R/W	R/W	R/W	R/W

LEGEND: R/W = Read/Write; R = Read only; -n = value after reset

Table 11. ChargeOption2 Register (SMBus address = 31h) Field Descriptions

SMBus BIT	FIELD	TYPE	RESET	DESCRIPTION
15-14	PKPWR_ TOVLD_DEG	R/W	00b	Input Overload time in Peak Power Mode 00b: 1 ms <default at POR> 01b: 2 ms 10b: 10 ms 11b: 20 ms
13	EN_PKPWR_IDPM	R/W	0b	Enable Peak Power Mode triggered by input current overshoot If REG0x31[13:12] are 00b, peak power mode is disabled. Upon adapter removal, the bits are reset to 00b. 0b: Disable peak power mode triggered by input current overshoot <default at POR> 1b: Enable peak power mode triggered by input current overshoot.
12	EN_PKPWR_VSYS	R/W	0b	Enable Peak Power Mode triggered by system voltage under-shoot If REG0x31[13:12] are 00b, peak power mode is disabled. Upon adapter removal, the bits are reset to 00b. 0b: Disable peak power mode triggered by system voltage under-shoot <default at POR> 1b: Enable peak power mode triggered by system voltage under-shoot.
11	PKPWR_ OVLD_STAT	R/W	0b	Indicator that the device is in overloading cycle. Write 0 to get out of overloading cycle. 0b: Not in peak power mode. <default at POR> 1b: In peak power mode.
10	PKPWR_ RELAX_STAT	R/W	0b	Indicator that the device is in relaxation cycle. Write 0 to get out of relaxation cycle. 0b: Not in relaxation cycle. <default at POR> 1b: In relaxation mode.
9-8	PKPWR_ TMAX[1:0]	R/W	10b	Peak power mode overload and relax cycle time. When REG0x31[15:14] is programmed longer than REG0x31[9:8], there is no relax time. 00b: 5 ms 01b: 10 ms 10b: 20 ms <default at POR> 11b: 40 ms

Table 12. ChargeOption2 Register (SMBus address = 31h) Field Descriptions

SMBus BIT	FIELD	TYPE	RESET	DESCRIPTION
7	EN_EXTILIM	R/W	1b	Enable ILIM_HIZ pin to set input current limit 0b: Input current limit is set by REG0x3F. 1b: Input current limit is set by the lower value of ILIM_HIZ pin and REG0x3F. <default at POR>
6	EN_ICHG _IDCHG	R/W	0b	0b: IBAT pin as discharge current. <default at POR> 1b: IBAT pin as charge current.
5	Q2_OCP	R/W	1b	Q2 OCP threshold by sensing Q2 VDS 0b: 210 mV 1b: 150 mV <default at POR>
4	ACX_OCP	R/W	1b	Input current OCP threshold by sensing ACP-ACN. 0b: 280 mV 1b: 150 mV <default at POR>
3	EN_ACOC	R/W	0b	ACOC Enable Input overcurrent (ACOC) protection by sensing the voltage across ACP and ACN. Upon ACOC (after 100-µs blank-out time), converter is disabled. 0b: Disable ACOC <default at POR> 1b: ACOC threshold 125% or 200% ICRIT
2	ACOC_VTH	R/W	1b	ACOC Limit Set MOSFET OCP threshold as percentage of IDPM with current sensed from $R_{AC.}$ 0b: 125% of ICRIT 1b: 200% of ICRIT <default at POR>
1	EN_BATOC	R/W	1b	BATOC Enable Battery discharge overcurrent (BATOC) protection by sensing the voltage across SRN and SRP. Upon BATOC, converter is disabled. 0b: Disable BATOC 1b: BATOC threshold 125% or 200% $\overline{\text{PROCHOT}}$ IDCHG <default at POR>
0	BATOC_VTH	R/W	1b	Set battery discharge overcurrent threshold as percentage of $\overline{\text{PROCHOT}}$ battery discharge current limit. 0b: 125% of $\overline{\text{PROCHOT}}$ IDCHG 1b: 200% of $\overline{\text{PROCHOT}}$ IDCHG <default at POR>

Copyright © 2017, Texas Instruments Incorporated

8.6.1.4 ChargeOption3 Register (SMBus address = 32h) [reset = 0h]

Figure 20. ChargeOption3 Register (SMBus address = 32h) [reset = 0h]

15	14	13	12	11	10	9	8
EN_HIZ	RESET_REG	RESET_ VINDPM	EN_OTG	EN_ICO_MOD E	Reserved		
R/W	R/W	R/W	R/W	R/W	R/W		
7	6	5	4	3	2	1	0
Reserved						BATFETOFF_ HIZ	PSYS_OTG_ IDCHG
R/W						R/W	R/W

LEGEND: R/W = Read/Write; R = Read only; -n = value after reset

Table 13. ChargeOption3 Register (SMBus address = 32h) Field Descriptions

SMBus BIT	FIELD	TYPE	RESET	DESCRIPTION
15	EN_HIZ	R/W	0b	Device Hi-Z Mode Enable When the charger is in Hi-Z mode, the device draws minimal quiescent current. With VBUS above UVLO. REGN LDO stays on, and system powers from battery. 0b: Device not in Hi-Z mode <default at POR> 1b: Device in Hi-Z mode
14	RESET_REG	R/W	0b	Reset Registers All the registers go back to the default setting except the VINDPM register. 0b: Idle <default at POR> 1b: Reset all the registers to default values. After reset, this bit goes back to 0.
13	RESET_VINDPM	R/W	0b	Reset VINDPM Threshold 0b: Idle 1b: Converter is disabled to measure VINDPM threshold. After VINDPM measurement is done, this bit goes back to 0 and converter starts.
12	EN_OTG	R/W	0b	OTG Mode Enable Enable device in OTG mode when EN_OTG pin is HIGH. 0b: Disable OTG <default at POR> 1b: Enable OTG mode to supply VBUS from battery.
11	EN_ICO_MODE	R/W	0b	Enable ICO Algorithm 0b: Disable ICO algorithm. <default at POR> 1b: Enable ICO algorithm.
10-8	Reserved	R/W	000b	Reserved

Table 14. ChargeOption3 Register (SMBus address = 32h) Field Descriptions

SMBus BIT	FIELD	TYPE	RESET	DESCRIPTION
7-2	Reserved	R/W	000000b	Reserved
1	BATFETOFF_ HIZ	R/W	0b	Control BATFET during HIZ mode. 0b: BATFET on during Hi-Z 1b: BATFET off during Hi-Z
0	PSYS_OTG_ IDCHG	R/W	0b	PSYS function during OTG mode. 0b: PSYS as battery discharge power minus OTG output power 1b: PSYS as battery discharge power only

8.6.1.5 ProchotOption0 Register (SMBus address = 33h) [reset = 04A54h]

Figure 21. ProchotOption0 Register (SMBus address = 33h) [reset = 04A54h]

15-11	10-9	8
ILIM2_VTH	ICRIT_DEG	Reserved
R/W	R/W	R/W

7-6	5	4-3	2	1	0
VSYS_VTH	EN_PROCHOT _EXT	PROCHOT_WIDTH	PROCHOT_ CLEAR	INOM_DEG	Reserved
R/W	R/W	R/W	R/W	R/W	R/W

LEGEND: R/W = Read/Write; R = Read only; -n = value after reset

Table 15. ProchotOption0 Register (SMBus address = 33h) Field Descriptions

SMBus BIT	FIELD	TYPE	RESET	DESCRIPTION
15-11	ILIM2_VTH	R/W	01001b	I_{LIM2} Threshold 5 bits, percentage of IDPM in 0x3FH. Measure current between ACP and ACN. Trigger when the current is above this threshold: 00001b - 11001b: 110% - 230%, step 5% 11010b - 11110b: 250% - 450%, step 50% 11111b: Out of Range (Ignored) Default 150%, or 01001
10-9	ICRIT_DEG	R/W	01b	ICRIT Deglitch time ICRIT threshold is set to be 110% of $_{ILIM2}$. Typical ICRIT deglitch time to trigger $\overline{PROCHOT}$. 00b: 15 µs 01b: 100 µs <default at POR> 10b: 400 µs (max 500 us) 11b: 800 µs (max 1 ms)
8	Reserved	R/W	0b	Reserved

Table 16. ProchotOption0 Register (SMBus address = 33h) Field Descriptions

SMBus BIT	FIELD	TYPE	RESET	DESCRIPTION
7-6	VSYS_VTH	R/W	01b	VSYS Threshold Measure on VSYS with fixed 20-µs deglitch time. Trigger when SYS pin voltage is below the threshold. 00b: 5.75 V (2-4 s) or 2.85 V (1 s) 01b: 6 V (2-4 s) or 3.1 V (1 s) <default at POR> 10b: 6.25 V (2-4 s) or 3.35 V (1 s) 11b: 6.5 V (2-4 s) or 3.6 V (1 s)
5	EN_PROCHOT _EXT	R/W	0b	When pulse extension is enabled, keep the $\overline{PROCHOT}$ pin voltage LOW until host writes 0x33[2] = 0. 0b: Disable pulse extension <default at POR> 1b: Enable pulse extension
4-3	PROCHOT _WIDTH	R/W	10b	$\overline{PROCHOT}$ Pulse Width $\overline{PROCHOT}$ Pulse Extension Enable Minimum $\overline{PROCHOT}$ pulse width when REG0x33[5] = 0 00b: 100 µs 01b: 1 ms 10b: 10 ms <default at POR> 11b: 5 ms

Copyright © 2017, Texas Instruments Incorporated

Table 16. ProchotOption0 Register (SMBus address = 33h) Field Descriptions (continued)

SMBus BIT	FIELD	TYPE	RESET	DESCRIPTION
2	PROCHOT _CLEAR	R/W	1b	$\overline{\text{PROCHOT}}$ Pulse Clear Clear $\overline{\text{PROCHOT}}$ pulse when 0x33[5] = 1. 0b: Clear $\overline{\text{PROCHOT}}$ pulse and drive $\overline{\text{PROCHOT}}$ pin HIGH. 1b: Idle <default at POR>
1	INOM_DEG	R/W	0b	INOM Deglitch Time INOM is always 10% above IDPM in 0x3FH. Measure current between ACP and ACN. Trigger when the current is above this threshold. 0b: 1 ms (must be max) <default at POR> 1b: 50 ms (max 60 ms)
0	Reserved	R/W	0b	Reserved

8.6.1.6 ProchotOption1 Register (SMBus address = 34h) [reset = 8120h]

Figure 22. ProchotOption1 Register (SMBus address = 34h) [reset = 8120h]

15-10						9-8	
IDCHG_VTH						IDCHG_DEG	
R/W						R/W	
7	6	5	4	3	2	1	0
Reserved	PROCHOT_PROFILE_IC	PP_ICRIT	PP_INOM	PP_IDCHG	PP_VSYS	PP_BATPRES	PP_ACOK
R/W	R/W	R/W	R/W	R/W	R/W	R/W	R/W

LEGEND: R/W = Read/Write; R = Read only; -n = value after reset

Table 17. ProchotOption1 Register (SMBus address = 34h) Field Descriptions

SMBus BIT	FIELD	TYPE	RESET	DESCRIPTION
15-10	IDCHG_VTH	R/W	000000b	IDCHG Threshold 6 bit, range, range 0 A to 32256 mA, step 512 mA. Measure current between SRN and SRP. Trigger when the discharge current is above the threshold. If the value is programmed to 0 mA, $\overline{\text{PROCHOT}}$ is always triggered. Default: 16384 mA or 100000
9-8	IDCHG_DEG	R/W	01b	IDCHG Deglitch Time 00b: 1.6 ms 01b: 100 µs <default at POR> 10b: 6 ms 11b: 12 ms

Table 18. ProchotOption1 Register (SMBus address = 34h) Field Descriptions

SMBus BIT	FIELD	TYPE	RESET	DESCRIPTION
7	Reserved	R/W	0b	Reserved
6	PROCHOT _PROFILE_COMP	R/W	0b	$\overline{\text{PROCHOT}}$ Profile When all the REG0x34[6:0] bits are 0, $\overline{\text{PROCHOT}}$ function is disabled. Bit6 Independent comparator 0b: disable <default at POR> 1b: enable
5	PROCHOT _PROFILE_ICRIT	R/W	1b	0b: disable 1b: enable <default at POR>
4	PROCHOT _PROFILE_INOM	R/W	0b	0b: disable <default at POR> 1b: enable
3	PROCHOT _PROFILE_IDCHG	R/W	0b	0b: disable <default at POR> 1b: enable
2	PROCHOT _PROFILE_VSYS	R/W	0b	0b: disable <default at POR> 1b: enable
1	PROCHOT _PROFILE_BATPRES	R/W	0b	0b: disable <default at POR> 1b: enable (one-shot falling edge triggered) If BATPRES is enabled in $\overline{\text{PROCHOT}}$ after the battery is removed, it will immediately send out one-shot $\overline{\text{PROCHOT}}$ pulse.

Copyright © 2017, Texas Instruments Incorporated

Table 18. ProchotOption1 Register (SMBus address = 34h) Field Descriptions (continued)

SMBus BIT	FIELD	TYPE	RESET	DESCRIPTION
0	PROCHOT _PROFILE_ACOK	R/W	0b	0b: disable <default at POR> 1b: enable ChargeOption0[15] = 0 to assert $\overline{\text{PROCHOT}}$ pulse after adapter removal. If PROCHOT_PROFILE_ACOK is enabled in $\overline{\text{PROCHOT}}$ after the adapter is removed, it will be pulled low.

8.6.1.7 ADCOption Register (SMBus address = 35h) [reset = 2000h]

Figure 23. ADCOption Register (SMBus address = 35h) [reset = 2000h]

15	14	13	12-8				
ADC_CONV	ADC_START	ADC_ FULLSCALE	Reserved				
R/W	R/W	R/W	R/W				
7	6	5	4	3	2	1	0
EN_ADC_ CMPIN	EN_ADC_ VBUS	EN_ADC_ PSYS	EN_ADC_ IIN	EN_ADC_ IDCHG	EN_ADC_ ICHG	EN_ADC_ VSYS	EN_ADC_ VBAT
R/W	R/W	R/W	R/W	R/W	R/W	R/W	R/W

LEGEND: R/W = Read/Write; R = Read only; -n = value after reset

The ADC registers are read in the following order: VBAT, VSYS, ICHG, IDCHG, IIN, PSYS, VBUS, CMPIN. ADC is disabled in low power mode. When enabling ADC, the device exit low power mode at battery only.

Table 19. ADCOption Register (SMBus address = 35h) Field Descriptions

SMBus BIT	FIELD	TYPE	RESET	DESCRIPTION
15	ADC_CONV	R/W	0b	Typical ADC conversion time is 10 ms. 0b: One-shot update. Do one set of conversion updates to registers REG0x23(), REG0x24(), REG0x25(), and REG0x26() after ADC_START = 1. 1b: Continuous update. Do a set of conversion updates to registers REG0x23(), REG0x24(), REG0x25(), and REG0x26() every 1 sec.
14	ADC_START	R/W	0b	0b: No ADC conversion 1b: Start ADC conversion. After the one-shot update is complete, this bit automatically resets to zero
13	ADC_ FULLSCALE	R/W	1b	ADC input voltage range. When input voltage is below 5 V, or battery is 1S, full scale 2.04 V is recommended. 0b: 2.04 V 1b: 3.06 V <default at POR>
12-8	Reserved	R/W	00000b	Reserved

Table 20. ADCOption Register (SMBus address = 35h) Field Descriptions

SMBus BIT	FIELD	TYPE	RESET	DESCRIPTION
7	EN_ADC_CMPIN	R/W	0b	0b: Disable <default at POR> 1b: Enable
6	EN_ADC_VBUS	R/W	0b	0b: Disable <default at POR> 1b: Enable
5	EN_ADC_PSYS	R/W	0b	0b: Disable <default at POR> 1b: Enable
4	EN_ADC_IIN	R/W	0b	0b: Disable <default at POR> 1b: Enable
3	EN_ADC_IDCHG	R/W	0b	0b: Disable <default at POR> 1b: Enable
2	EN_ADC_ICHG	R/W	0b	0b: Disable <default at POR> 1b: Enable
1	EN_ADC_VSYS	R/W	0b	0b: Disable <default at POR> 1b: Enable
0	EN_ADC_VBAT	R/W	0b	0b: Disable <default at POR> 1b: Enable

Copyright © 2017, Texas Instruments Incorporated

8.6.2 Charge and $\overline{\text{PROCHOT}}$ Status

8.6.2.1 ChargerStatus Register (SMBus address = 20h) [reset = 0000h]

Figure 24. ChargerStatus Register (SMBus address = 20h) [reset = 0000h]

15	14	13	12	11	10	9	8
AC_STAT	ICO_DONE	Reserved	IN_VINDPM	IN_IINDPM	IN_FCHRG	IN_PCHRG	IN_OTG
R	R	R	R	R	R	R	R
7	6	5	4	3	2	1	0
Fault ACOV	Fault BATOC	Fault ACOC	SYSOVP_ STAT	Reserved	Fault Latchoff	Fault_OTG_ OVP	Fault_OTG_ OCP
R	R	R	R	R	R	R	R

LEGEND: R/W = Read/Write; R = Read only; -n = value after reset

Table 21. ChargerStatus Register (SMBus address = 20h) Field Descriptions

SMBus BIT	FIELD	TYPE	RESET	DESCRIPTION
15	AC_STAT	R	0b	Input source status, same as CHRG_OK bit 0b: Input not present 1b: Input is present
14	ICO_DONE	R	0b	After the ICO routine is successfully executed, the bit goes 1. 0b: ICO is not complete 1b: ICO is complete
13	Reserved	R	0b	Reserved
12	IN_VINDPM	R	0b	0b: Charger is not in VINDPM during forward mode, or voltage regulation during OTG mode 1b: Charger is in VINDPM during forward mode, or voltage regulation during OTG mode
11	IN_IINDPM	R	0b	0b: Charger is not in IINDPM 1b: Charger is in IINDPM
10	IN_FCHRG	R	0b	0b: Charger is not in fast charge 1b: Charger is in fast charger
9	IN_PCHRG	R	0b	0b: Charger is not in pre-charge 1b: Charger is in pre-charge
8	IN_OTG	R	0b	0b: Charger is not in OTG 1b: Charge is in OTG

Table 22. ChargerStatus Register (SMBus address = 20h) Field Descriptions

SMBus BIT	FIELD	TYPE	RESET	DESCRIPTION
7	Fault ACOV	R	0b	The faults are latched until a read from host. 0b: No fault 1b: ACOV
6	Fault BATOC	R	0b	The faults are latched until a read from host. 0b: No fault 1b: BATOC
5	Fault ACOC	R	0b	The faults are latched until a read from host. 0b: No fault 1b: ACOC

Table 22. ChargerStatus Register (SMBus address = 20h) Field Descriptions (continued)

SMBus BIT	FIELD	TYPE	RESET	DESCRIPTION
4	SYSOVP_STAT	R	0b	SYSOVP Status and Clear When the SYSOVP occurs, this bit is HIGH. During the SYSOVP, the converter is disabled. After the SYSOVP is removed, the user must write a 0 to this bit or unplug the adapter to clear the SYSOVP condition to enable the converter again. 0b: Not in SYSOVP <default at POR> 1b: In SYSOVP. When SYSOVP is removed, write 0 to clear the SYSOVP latch.
3	Reserved	R	0b	Reserved
2	Fault Latchoff	R	0b	The faults are latched until a read from host. 0b: No fault 1b: Latch off (REG0x30[3])
1	Fault_OTG_OVP	R	0b	The faults are latched until a read from host. 0b: No fault 1b: OTG OVP
0	Fault_OTG_UCP	R	0b	The faults are latched until a read from host. 0b: No fault 1b: OTG OCP

Copyright © 2017, Texas Instruments Incorporated

8.6.2.2 ProchotStatus Register (SMBus address = 21h) [reset = 0h]

Figure 25. ProchotStatus Register (SMBus address = 21h) [reset = 0h]

15-8							
Reserved							
R							
7	6	5	4	3	2	1	0
Reserved	STAT_COMP	STAT_ICRIT	STAT_INOM	STAT_IDCHG	STAT_VSYS	STAT_Battery_ Removal	STAT_Adapter _Removal
R	R	R	R	R	R	R	R

LEGEND: R/W = Read/Write; R = Read only; -n = value after reset

Table 23. ProchotStatus Register (SMBus address = 21h) Field Descriptions

SMBus BIT	FIELD	TYPE	RESET	DESCRIPTION
15-8	Reserved	R	00000000b	Reserved

Table 24. ProchotStatus Register (SMBus address = 21h) Field Descriptions

SMBus BIT	FIELD	TYPE	RESET	DESCRIPTION
7	Reserved	R	0b	Reserved
6	STAT_COMP	R	0b	0b: Not triggered 1b: Triggered
5	STAT_ICRIT	R	0b	0b: Not triggered 1b: Triggered
4	STAT_INOM	R	0b	0b: Not triggered 1b: Triggered
3	STAT_IDCHG	R	0b	0b: Not triggered 1b: Triggered
2	STAT_VSYS	R	0b	0b: Not triggered 1b: Triggered
1	STAT_Battery_Removal	R	0b	0b: Not triggered 1b: Triggered
0	STAT_Adapter_Removal	R	0b	0b: Not triggered 1b: Triggered

8.6.3 ChargeCurrent Register (SMBus address = 14h) [reset = 0h]

To set the charge current, write a 16-bit ChargeCurrent() command (REG0x14()) using the data format listed in Table 25 and Table 26.

With 10-mΩ sense resistor, the charger provides charge current range of 64 mA to 8.128 A, with a 64-mA step resolution. Upon POR, ChargeCurrent() is 0 A. Any conditions for CHRG_OK low except ACOV will reset ChargeCurrent() to zero. CELL_BATPRESZ going LOW (battery removal) will reset the ChargeCurrent() register to 0 A.

Charge current is not reset in ACOC, TSHUT, power path latch off (REG0x30[1]), and SYSOVP.

A 0.1-µF capacitor between SRP and SRN for differential mode filtering is recommended; an optional 0.1-µF capacitor between SRN and ground, and an optional 0.1-µF capacitor between SRP and ground for common mode filtering. Meanwhile, the capacitance on SRP should not be higher than 0.1 µF in order to properly sense the voltage across SRP and SRN for cycle-by-cycle current detection.

The SRP and SRN pins are used to sense voltage drop across RSR with default value of 10 mΩ. However, resistors of other values can also be used. For a larger sense resistor, a larger sense voltage is given, and a higher regulation accuracy; but, at the expense of higher conduction loss. If current sensing resistor value is too high, it may trigger an over current protection threshold because the current ripple voltage is too high. In such a case, either a higher inductance value or a lower current sensing resistor value should be used to limit the current ripple voltage level. A current sensing resistor value no more than 20 mΩ is suggested.

Figure 26. ChargeCurrent Register With 10-mΩ Sense Resistor (SMBus address = 14h) [reset = 0h]

15	14	13	12	11	10	9	8
Reserved			Charge Current, bit 6	Charge Current, bit 5	Charge Current, bit 4	Charge Current, bit 3	Charge Current, bit 2
R/W			R/W	R/W	R/W	R/W	R/W
7	6	5	4	3	2	1	0
Charge Current, bit 1	Charge Current, bit 0	Reserved	Reserved				
R/W	R/W	R/W	R/W				

LEGEND: R/W = Read/Write; R = Read only; -n = value after reset

Table 25. Charge Current Register (14h) With 10-mΩ Sense Resistor (SMBus address = 14h) Field Descriptions

SMBus BIT	FIELD	TYPE	RESET	DESCRIPTION
15-13	Reserved	R/W	000b	Not used. 1 = invalid write.
12	Charge Current, bit 6	R/W	0b	0 = Adds 0 mA of charger current. 1 = Adds 4096 mA of charger current.
11	Charge Current, bit 5	R/W	0b	0 = Adds 0 mA of charger current. 1 = Adds 2048 mA of charger current.
10	Charge Current, bit 4	R/W	0b	0 = Adds 0 mA of charger current. 1 = Adds 1024 mA of charger current.
9	Charge Current, bit 3	R/W	0b	0 = Adds 0 mA of charger current. 1 = Adds 512 mA of charger current.
8	Charge Current, bit 2	R/W	0b	0 = Adds 0 mA of charger current. 1 = Adds 256 mA of charger current.

Table 26. Charge Current Register (14h) With 10-mΩ Sense Resistor (SMBus address = 14h) Field Descriptions

SMBus BIT	FIELD	TYPE	RESET	DESCRIPTION
7	Charge Current, bit 1	R/W	0b	0 = Adds 0 mA of charger current. 1 = Adds 128 mA of charger current.

Copyright © 2017, Texas Instruments Incorporated

Table 26. Charge Current Register (14h) With 10-mΩ Sense Resistor (SMBus address = 14h) Field Descriptions (continued)

SMBus BIT	FIELD	TYPE	RESET	DESCRIPTION
6	Charge Current, bit 0	R/W	0b	0 = Adds 0 mA of charger current. 1 = Adds 64 mA of charger current.
5-0	Reserved	R/W	000000b	Not used. Value Ignored.

8.6.3.1 Battery Pre-Charge Current Clamp

During pre-charge, BATFET works in linear mode or LDO mode (default REG0x12[2] = 1). For 2-4 cell battery, the system is regulated at minimum system voltage in REG0x3E() and the pre-charge current is clamped at 384 mA. For 1 cell battery, the pre-charge to fast charge threshold is 3 V, and the pre-charge current is clamped at 384 mA. However, the BATFET stays in LDO mode operation till battery voltage is above minimum system voltage (~3.6 V). During battery voltage from 3 V to 3.6 V, the fast charge current is clamped at 2 A.

8.6.4 MaxChargeVoltage Register (SMBus address = 15h) [reset value based on CELL_BATPRESZ pin setting]

To set the output charge voltage, write a 16-bit ChargeVoltage register command (REG0x15()) using the data format listed in Table 27 and Table 28. The charger provides charge voltage range from 1.024 V to 19.200 V, with 16-mV step resolution. Any write below 1.024 V or above 19.200 V is ignored. Upon POR or when charge is disabled, the system is regulated at the MaxChargeVoltage register.

Upon POR, REG0x15() is by default set as 4192 mV for 1 s, 8400 mV for 2 s, 12592 mV for 3 s or 16800 mV for 4 s. After CHRG_OK, if host writes REG0x14() before REG0x15(), the charge will start after the write to REG0x14().If the battery is different from 4.2 V/cell, the host has to write to REG0x15() before REG0x14() for correct battery voltage setting. Writing REG0x15() to 0 will set REG0x15() to default value on CELL_BATPRESZ pin, and force REG0x14() to zero to disable charge.

The SRN pin is used to sense the battery voltage for voltage regulation and should be connected as close to the battery as possible, and directly place a decoupling capacitor (0.1 µF recommended) as close to the device as possible to decouple high frequency noise.

Figure 27. MaxChargeVoltage Register (SMBus address = 15h) [reset value based on CELL_BATPRESZ pin setting]

15	14	13	12	11	10	9	8
Reserved	Max Charge Voltage, bit 10	Max Charge Voltage, bit 9	Max Charge Voltage, bit 8	Max Charge Voltage, bit 7	Max Charge Voltage, bit 6	Max Charge Voltage, bit 5	Max Charge Voltage, bit 4
R/W	R/W	R/W	R/W	R/W	R/W	R/W	R/W
7	6	5	4	3	2	1	0
Max Charge Voltage, bit 3	Max Charge Voltage, bit 2	Max Charge Voltage, bit 1	Max Charge Voltage, bit 0	Reserved			
R/W	R/W	R/W	R/W	R/W			

LEGEND: R/W = Read/Write; R = Read only; -n = value after reset

Table 27. MaxChargeVoltage Register (SMBus address = 15h) Field Descriptions

SMBus BIT	FIELD	TYPE	RESET	DESCRIPTION
15	Reserved	R/W	0b	Not used. 1 = invalid write.
14	Max Charge Voltage, bit 10	R/W	0b	0 = Adds 0 mV of charger voltage. 1 = Adds 16384 mV of charger voltage.
13	Max Charge Voltage, bit 9	R/W	0b	0 = Adds 0 mV of charger voltage. 1 = Adds 8192 mV of charger voltage
12	Max Charge Voltage, bit 8	R/W	0b	0 = Adds 0 mV of charger voltage. 1 = Adds 4096 mV of charger voltage.
11	Max Charge Voltage, bit 7	R/W	0b	0 = Adds 0 mV of charger voltage. 1 = Adds 2048 mV of charger voltage.
10	Max Charge Voltage, bit 6	R/W	0b	0 = Adds 0 mV of charger voltage. 1 = Adds 1024 mV of charger voltage.
9	Max Charge Voltage, bit 5	R/W	0b	0 = Adds 0 mV of charger voltage. 1 = Adds 512 mV of charger voltage.
8	Max Charge Voltage, bit 4	R/W	0b	0 = Adds 0 mV of charger voltage. 1 = Adds 256 mV of charger voltage.

Table 28. MaxChargeVoltage Register (SMBus address = 15h) Field Descriptions

SMBus BIT	FIELD	TYPE	RESET	DESCRIPTION
7	Max Charge Voltage, bit 3	R/W	0b	0 = Adds 0 mV of charger voltage. 1 = Adds 128 mV of charger voltage.

Copyright © 2017, Texas Instruments Incorporated

Table 28. MaxChargeVoltage Register (SMBus address = 15h) Field Descriptions (continued)

SMBus BIT	FIELD	TYPE	RESET	DESCRIPTION
6	Max Charge Voltage, bit 2	R/W	0b	0 = Adds 0 mV of charger voltage. 1 = Adds 64 mV of charger voltage.
5	Max Charge Voltage, bit 1	R/W	0b	0 = Adds 0 mV of charger voltage. 1 = Adds 32 mV of charger voltage.
4	Max Charge Voltage, bit 0	R/W	0b	0 = Adds 0 mV of charger voltage. 1 = Adds 16 mV of charger voltage.
3-0	Reserved	R/W	0000b	Not used. Value Ignored.

8.6.5 MinSystemVoltage Register (SMBus address = 3Eh) [reset value based on CELL_BATPRESZ pin setting]

To set the minimum system voltage, write a 16-bit MinSystemVoltage register command (REG0x3E()) using the data format listed in Table 29 and Table 30. The charger provides minimum system voltage range from 1.024 V to 16.128 V, with 256-mV step resolution. Any write below 1.024 V or above 16.128 V is ignored. Upon POR, the MinSystemVoltage register is 3.584 V for 1 S, 6.144 V for 2 S and 9.216 V for 3 S, and 12.288 V for 4 S.

Figure 28. MinSystemVoltage Register (SMBus address = 3Eh) [reset value based on CELL_BATPRESZ pin setting]

15	14	13	12	11	10	9	8
Reserved		Min System Voltage, bit 5	Min System Voltage, bit 4	Min System Voltage, bit 3	Min System Voltage, bit 2	Min System Voltage, bit 1	Min System Voltage, bit 0
R/W		R/W	R/W	R/W	R/W	R/W	R/W
7	6	5	4	3	2	1	0
Reserved							
R/W							

LEGEND: R/W = Read/Write; R = Read only; -n = value after reset

Table 29. MinSystemVoltage Register (SMBus address = 3Eh) Field Descriptions

SMBus BIT	FIELD	TYPE	RESET	DESCRIPTION
15-14	Reserved	R/W	00b	Not used. 1 = invalid write.
13	Min System Voltage, bit 5	R/W	0b	0 = Adds 0 mV of system voltage. 1 = Adds 8192 mV of system voltage.
12	Min System Voltage, bit 4	R/W	0b	0 = Adds 0 mV of system voltage. 1 = Adds 4096mV of system voltage.
11	Min System Voltage, bit 3	R/W	0b	0 = Adds 0 mV of system voltage. 1 = Adds 2048 mV of system voltage.
10	Min System Voltage, bit 2	R/W	0b	0 = Adds 0 mV of system voltage. 1 = Adds 1024 mV of system voltage.
9	Min System Voltage, bit 1	R/W	0b	0 = Adds 0 mV of system voltage. 1 = Adds 512 mV of system voltage.
8	Min System Voltage, bit 0	R/W	0b	0 = Adds 0 mV of system voltage. 1 = Adds 256 mV of system voltage.

Table 30. MinSystemVoltage Register (SMBus address = 3Eh) Field Descriptions

SMBus BIT	FIELD	TYPE	RESET	DESCRIPTION
7-0	Reserved	R/W	00000000b	Not used. Value Ignored.

8.6.5.1 System Voltage Regulation

The device employs Narrow VDC architecture (NVDC) with BATFET separating system from battery. The minimum system voltage is set by REG0x3E(). Even with a deeply depleted battery, the system is regulated above the minimum system voltage with BATFET.

When the battery is below minimum system voltage setting, the BATFET operates in linear mode (LDO mode), and the system is regulated above the minimum system voltage setting. As the battery voltage rises above the minimum system voltage, BATFET is fully on when charging or in supplement mode and the voltage difference between the system and battery is the VDS of BATFET. System voltage is regulated 160 mV above battery voltage when BATFET is off (no charging or no supplement current).

When BATFET is removed, the system node VSYS is shorted to SRP. Before the converter starts operation, LDO mode needs to be disabled. The following sequence is required to configure charger without BATFET.

1. Before adapter plugs in, put the charger into HIZ mode. (either pull pin 6 ILIM_HIZ to ground, or set

Copyright © 2017, Texas Instruments Incorporated

REG0x32[15] to 1)

2. Set 0x12[2] to 0 to disable LDO mode.
3. Set 0x30[0] to 0 to disable auto-wakeup mode.
4. Check if battery voltage is properly programmed (REG0x15)
5. Set pre-charge/charge current (REG0x14)
6. Put the device out of HIZ mode. (Release ILIM_HIZ from ground and set REG0x32[15]=0).

In order to prevent any accidental SW mistakes, the host sets low input current limit (a few hundred milliamps) when device is out of HIZ.

8.6.6 Input Current and Input Voltage Registers for Dynamic Power Management

The charger supports Dynamic Power Management (DPM). Normally, the input power source provides power for the system load or to charge the battery. When the input current exceeds the input current setting, or the input voltage falls below the input voltage setting, the charger decreases the charge current to provide priority to the system load. As the system current rises, the available charge current drops accordingly toward zero. If the system load keeps increasing after the charge current drops down to zero, the system voltage starts to drop. As the system voltage drops below the battery voltage, the battery will discharge to supply the heavy system load.

8.6.6.1 Input Current Registers

To set the maximum input current limit, write a 16-bit IIN_HOST register command (REG0x3F()) using the data format listed in Table 31 and Table 32. When using a 10-mΩ sense resistor, the charger provides an input-current limit range of 50 mA to 6400 mA, with 50-mA resolution. The default current limit is 3.3 A. Due to the USB current setting requirement, the register setting specifies the maximum current instead of the typical current. Upon adapter removal, the input current limit is reset to the default value of 3.3 A. The register offset is 50 mA. With code 0, the input current limit is 50 mA.

The ACP and ACN pins are used to sense R_{AC} with the default value of 10 mΩ. However, resistors of other values can also be used. For a larger sense resistor, a larger sense voltage is given and a higher regulation accuracy, but at the expense of higher conduction loss.

Instead of using the internal DPM loop, the user can build up an external input current regulation loop and have the feedback signal on the ILIM_HIZ pin.

$$V_{ILIM_HIZ} = 1V + 40 \times (V_{ACP} - V_{ACN}) = 1 + 40 \times I_{DPM} \times R_{AC} \quad (2)$$

In order to disable ILIM_HIZ pin, the host can write to 0x31[7] to disable ILIM_HIZ pin, or pull ILIM_HIZ pin above 4.0 V.

8.6.6.1.1 IIN_HOST Register With 10-mΩ Sense Resistor (SMBus address = 3Fh) [reset = 4000h]

Figure 29. IIN_HOST Register With 10-mΩ Sense Resistor (SMBus address = 3Fh) [reset = 4100h]

15	14	13	12	11	10	9	8
Reserved	Input Current set by host, bit 6	Input Current set by host, bit 5	Input Current set by host, bit 4	Input Current set by host, bit 3	Input Current set by host, bit 2	Input Current set by host, bit 1	Input Current set by host, bit 0
R/W	R/W	R/W	R/W	R/W	R/W	R/W	R/W
7	6	5	4	3	2	1	0
Reserved							
R							

LEGEND: R/W = Read/Write; R = Read only; -n = value after reset

Table 31. IIN_HOST Register With 10-mΩ Sense Resistor (SMBus address = 3Fh) Field Descriptions

SMBus BIT	FIELD	TYPE	RESET	DESCRIPTION
15	Reserved	R/W	0b	Not used. 1 = invalid write.
14	Input Current set by host, bit 6	R/W	1b	0 = Adds 0 mA of input current. 1 = Adds 3200 mA of input current.
13	Input Current set by host, bit 5	R/W	0b	0 = Adds 0 mA of input current. 1 = Adds 1600 mA of input current.
12	Input Current set by host, bit 4	R/W	0b	0 = Adds 0 mA of input current. 1 = Adds 800 mA of input current.
11	Input Current set by host, bit 3	R/W	0b	0 = Adds 0 mA of input current. 1 = Adds 400 mA of input current.
10	Input Current set by host, bit 2	R/W	0b	0 = Adds 0 mA of input current. 1 = Adds 200 mA of input current.
9	Input Current set by host, bit 1	R/W	0b	0 = Adds 0 mA of input current. 1 = Adds 100 mA of input current.
8	Input Current set by host, bit 0	R/W	0b	0 = Adds 0 mA of input current. 1 = Adds 50 mA of input current.

Table 32. IIN_HOST Register With 10-mΩ Sense Resistor (SMBus address = 3Fh) Field Descriptions

SMBus BIT	FIELD	TYPE	RESET	DESCRIPTION
7-0	Reserved	R	00000000b	Not used. Value Ignored.

Copyright © 2017, Texas Instruments Incorporated

8.6.6.1.2 IIN_DPM Register With 10-mΩ Sense Resistor (SMBus address = 022h) [reset = 0h]

IIN_DPM register reflects the actual input current limit programmed in the register, either from host or from ICO.

After ICO, the current limit used by DPM regulation may differ from the IIN_HOST register settings. The actual DPM limit is reported in REG0x22(). The register offset is 50 mA. With code 0, the input current limit read-back is 50 mA.

Figure 30. IIN_DPM Register With 10-mΩ Sense Resistor (SMBus address = 022h) [reset = 0h]

15	14	13	12	11	10	9	8
Reserved	Input Current in DPM, bit 6	Input Current in DPM, bit 5	Input Current in DPM, bit 4	Input Current in DPM, bit 3	Input Current in DPM, bit 2	Input Current in DPM, bit 1	Input Current in DPM, bit 0
R	R	R	R	R	R	R	R
7	6	5	4	3	2	1	0
Reserved							
R							

LEGEND: R/W = Read/Write; R = Read only; -n = value after reset

Table 33. IIN_DPM Register With 10-mΩ Sense Resistor (SMBus address = 022h) Field Descriptions

SMBus BIT	FIELD	TYPE	RESET	DESCRIPTION
15	Reserved	R	0b	Not used. 1 = invalid write.
14	Input Current in DPM, bit 6	R	0b	0 = Adds 0 mA of input current. 1 = Adds 3200 mA of input current.
13	Input Current in DPM, bit 5	R	0b	0 = Adds 0 mA of input current. 1 = Adds 1600 mA of input current.
12	Input Current in DPM, bit 4	R	0b	0 = Adds 0 mA of input current. 1 = Adds 800mA of input current
11	Input Current in DPM, bit 3	R	0b	0 = Adds 0 mA of input current. 1 = Adds 400 mA of input current.
10	Input Current in DPM, bit 2	R	0b	0 = Adds 0 mA of input current. 1 = Adds 200 mA of input current.
9	Input Current in DPM, bit 1	R	0b	0 = Adds 0 mA of input current. 1 = Adds 100 mA of input current.
8	Input Current in DPM, bit 0	R	0b	0 = Adds 0 mA of input current. 1 = Adds 50 mA of input current.

Table 34. IIN_DPM Register With 10-mΩ Sense Resistor (SMBus address = 022h) Field Descriptions

SMBus BIT	FIELD	TYPE	RESET	DESCRIPTION
7-0	Reserved	R	00000000b	Not used. Value Ignored.

8.6.6.1.3 InputVoltage Register (SMBus address = 3Dh) [reset = VBUS-1.28V]

To set the input voltage limit, write a 16-bit InputVoltage register command (REG0x3D()) using the data format listed in Table 35 and Table 36.

If the input voltage drops more than the InputVoltage register allows, the device enters DPM and reduces the charge current. The default offset voltage is 1.28 V below the no-load VBUS voltage. The DC offset is 3.2 V (0000000).

Figure 31. InputVoltage Register (SMBus address = 3Dh) [reset = VBUS-1.28V]

15	14	13	12	11	10	9	8
Reserved		Input Voltage, bit 7	Input Voltage, bit 6	Input Voltage, bit 5	Input Voltage, bit 4	Input Voltage, bit 3	Input Voltage, bit 2
R/W		R/W	R/W	R/W	R/W	R/W	R/W
7	6	5	4	3	2	1	0
Input Voltage, bit 1	Input Voltage, bit 0	Reserved					
R/W	R/W	R/W					

LEGEND: R/W = Read/Write; R = Read only; -n = value after reset

Table 35. InputVoltage Register (SMBus address = 3Dh) Field Descriptions

SMBus BIT	FIELD	TYPE	RESET	DESCRIPTION
15-14	Reserved	R/W	00b	Not used. 1 = invalid write.
13	Input Voltage, bit 7	R/W	0b	0 = Adds 0 mV of input voltage. 1 = Adds 8192 mV of input voltage.
12	Input Voltage, bit 6	R/W	0b	0 = Adds 0 mV of input voltage. 1 = Adds 4096mV of input voltage.
11	Input Voltage, bit 5	R/W	0b	0 = Adds 0 mV of input voltage. 1 = Adds 2048 mV of input voltage.
10	Input Voltage, bit 4	R/W	0b	0 = Adds 0 mV of input voltage. 1 = Adds 1024 mV of input voltage.
9	Input Voltage, bit 3	R/W	0b	0 = Adds 0 mV of input voltage. 1 = Adds 512 mV of input voltage.
8	Input Voltage, bit 2	R/W	0b	0 = Adds 0 mV of input voltage. 1 = Adds 256 mV of input voltage.

Table 36. InputVoltage Register (SMBus address = 3Dh) Field Descriptions

SMBus BIT	FIELD	TYPE	RESET	DESCRIPTION
7	Input Voltage, bit 1	R/W	0b	0 = Adds 0 mV of input voltage. 1 = Adds 128 mV of input voltage.
6	Input Voltage, bit 0	R/W	0b	0 = Adds 0 mV of input voltage. 1 = Adds 64 mV of input voltage
5-0	Reserved	R/W	000000b	Not used. Value Ignored.

Copyright © 2017, Texas Instruments Incorporated

8.6.7 OTGVoltage Register (SMBus address = 3Bh) [reset = 0h]

To set the OTG output voltage limit, write to REG0x3B() using the data format listed in Table 37 and Table 38. The DC offset is 4.48 V (0000000).

Figure 32. OTGVoltage Register (SMBus address = 3Bh) [reset = 0h]

15	14	13	12	11	10	9	8
Reserved		OTG Voltage, bit 7	OTG Voltage, bit 6	OTG Voltage, bit 5	OTG Voltage, bit 4	OTG Voltage, bit 3	OTG Voltage, bit 2
R/W		R/W	R/W	R/W	R/W	R/W	R/W
7	6	5	4	3	2	1	0
OTG Voltage, bit 1	OTG Voltage, bit 0	Reserved					
R/W	R/W	R/W					

LEGEND: R/W = Read/Write; R = Read only; -n = value after reset

Table 37. OTGVoltage Register (SMBus address = 3Bh) Field Descriptions

SMBus BIT	FIELD	TYPE	RESET	DESCRIPTION
15-14	Reserved	R/W	00b	Not used. 1 = invalid write.
13	OTG Voltage, bit 7	R/W	0b	0 = Adds 0 mV of OTG voltage. 1 = Adds 8192 mV of OTG voltage.
12	OTG Voltage, bit 6	R/W	0b	0 = Adds 0 mV of OTG voltage. 1 = Adds 4096 mV of OTG voltage.
11	OTG Voltage, bit 5	R/W	0b	0 = Adds 0 mV of OTG voltage. 1 = Adds 2048 mV of OTG voltage.
10	OTG Voltage, bit 4	R/W	0b	0 = Adds 0 mV of OTG voltage. 1 = Adds 1024 mV of OTG voltage.
9	OTG Voltage, bit 3	R/W	0b	0 = Adds 0 mV of OTG voltage. 1 = Adds 512 mV of OTG voltage.
8	OTG Voltage, bit 2	R/W	0b	0 = Adds 0 mV of OTG voltage. 1 = Adds 256 mV of OTG voltage.

Table 38. OTGVoltage Register (SMBus address = 3Bh) Field Descriptions

SMBus BIT	FIELD	TYPE	RESET	DESCRIPTION
7	OTG Voltage, bit 1	R/W	0b	0 = Adds 0 mV of OTG voltage. 1 = Adds 128 mV of OTG voltage.
6	OTG Voltage, bit 0	R/W	0b	0 = Adds 0 mV of OTG voltage. 1 = Adds 64 mV of OTG voltage.
5-0	Reserved	R/W	000000b	Not used. Value Ignored.

Copyright © 2017, Texas Instruments Incorporated

8.6.8 OTGCurrent Register (SMBus address = 3Ch) [reset = 0h]

To set the OTG output current limit, write to REG0x3C() using the data format listed in Table 39 and Table 40.

Figure 33. OTGCurrent Register (SMBus address = 3Ch) [reset = 0h]

15	14	13	12	11	10	9	8
Reserved	OTG Current set by host, bit 6	OTG Current set by host, bit 5	OTG Current set by host, bit 4	OTG Current set by host, bit 3	OTG Current set by host, bit 2	OTG Current set by host, bit 1	OTG Current set by host, bit 0
R/W	R/W	R/W	R/W	R/W	R/W	R/W	R/W
7	6	5	4	3	2	1	0
Reserved							
R/W							

LEGEND: R/W = Read/Write; R = Read only; -n = value after reset

Table 39. OTGCurrent Register (SMBus address = 3Ch) Field Descriptions

SMBus BIT	FIELD	TYPE	RESET	DESCRIPTION
15	Reserved	R/W	0b	Not used. 1 = invalid write.
14	OTG Current set by host, bit 6	R/W	0b	0 = Adds 0 mA of OTG current. 1 = Adds 3200 mA of OTG current.
13	OTG Current set by host, bit 5	R/W	0b	0 = Adds 0 mA of OTG current. 1 = Adds 1600mA of OTG current.
12	OTG Current set by host, bit 4	R/W	0b	0 = Adds 0 mA of OTG current. 1 = Adds 800 mA of OTG current.
11	OTG Current set by host, bit 3	R/W	0b	0 = Adds 0 mA of OTG current. 1 = Adds 400 mA of OTG current.
10	OTG Current set by host, bit 2	R/W	0b	0 = Adds 0 mA of OTG current. 1 = Adds 200 mA of OTG current.
9	OTG Current set by host, bit 1	R/W	0b	0 = Adds 0 mA of OTG current. 1 = Adds 100 mA of OTG current.
8	OTG Current set by host, bit 0	R/W	0b	0 = Adds 0 mA of OTG current. 1 = Adds 50 mA of OTG current.

Table 40. OTGCurrent Register (SMBus address = 3Ch) Field Descriptions

SMBus BIT	FIELD	TYPE	RESET	DESCRIPTION
7-0	Reserved	R/W	00000000 b	Not used. Value Ignored.

Copyright © 2017, Texas Instruments Incorporated

8.6.9 ADCVBUS/PSYS Register (SMBus address = 23h)

- PSYS: Full range: 3.06 V, LSB: 12 mV
- VBUS: Full range: 3200 mV to 19520 mV, LSB: 64 mV

Figure 34. ADCVBUS/PSYS Register (SMBus address = 23h)

15	14	13	12	11	10	9	8
R	R	R	R	R	R	R	R
7	6	5	4	3	2	1	0
R	R	R	R	R	R	R	R

LEGEND: R/W = Read/Write; R = Read only; -n = value after reset

Table 41. ADCVBUS/PSYS Register Field Descriptions

BIT	FIELD	TYPE	RESET	DESCRIPTION
15-8		R		8-bit Digital Output of Input Voltage
7-0		R		8-bit Digital Output of System Power

8.6.10 ADCIBAT Register (SMBus address = 24h)

- ICHG: Full range: 8.128 A, LSB 64: mA
- IDCHG: Full range: 32.512 A, LSB: 256 mA

Figure 35. ADCIBAT Register (SMBus address = 24h)

15	14	13	12	11	10	9	8
Reserved	R	R	R	R	R	R	R
7	6	5	4	3	2	1	0
Reserved	R	R	R	R	R	R	R

LEGEND: R/W = Read/Write; R = Read only; -n = value after reset

Table 42. ADCIBAT Register Field Descriptions

BIT	FIELD	TYPE	RESET	DESCRIPTION
15	Reserved	R		Not used. Value ignored.
14-8		R		7-bit Digital Output of Battery Charge Current
7	Reserved	R		Not used. Value ignored.
6-0		R		7-bit Digital Output of Battery Discharge Current

Copyright © 2017, Texas Instruments Incorporated

8.6.11 ADCIINCMPIN Register (SMBus address = 25h)

- IIN: Full range: 12.75 A, LSB: 50 mA
- CMPIN: Full range: 3.06 V, LSB: 12 mV

Figure 36. ADCIINCMPIN Register (SMBus address = 25h)

15	14	13	12	11	10	9	8
R	R	R	R	R	R	R	R
7	6	5	4	3	2	1	0
R	R	R	R	R	R	R	R

LEGEND: R/W = Read/Write; R = Read only; -n = value after reset

Table 43. ADCIINCMPIN Register Field Descriptions

BIT	FIELD	TYPE	RESET	DESCRIPTION
15-8		R		8-bit Digital Output of Input Current
7-0		R		8-bit Digital Output of CMPIN voltage

8.6.12 ADCVSYSVBAT Register (SMBus address = 26h) (reset =)

- VSYS: Full range: 2.88 V to 19.2 V, LSB: 64 mV
- VBAT: Full range: 2.88 V to 19.2 V, LSB: 64 mV

Figure 37. ADCVSYSVBAT Register (SMBus address = 26h) (reset =)

15	14	13	12	11	10	9	8
R	R	R	R	R	R	R	R
7	6	5	4	3	2	1	0
R	R	R	R	R	R	R	R

LEGEND: R/W = Read/Write; R = Read only; -n = value after reset

Table 44. ADCVSYSVBAT Register Field Descriptions

BIT	FIELD	TYPE	RESET	DESCRIPTION
15-8		R		8-bit Digital Output of System Voltage
7-0		R		8-bit Digital Output of Battery Voltage

Copyright © 2017, Texas Instruments Incorporated

8.6.13 ID Registers

8.6.13.1 ManufactureID Register (SMBus address = FEh) [reset = 0040h]

Figure 38. ManufactureID Register (SMBus address = FEh) [reset = 0040h]

15-0
MANUFACTURE_ID
R

LEGEND: R/W = Read/Write; R = Read only; -n = value after reset

Table 45. ManufactureID Register Field Descriptions

SMBus BIT	FIELD	TYPE	RESET	DESCRIPTION (READ ONLY)
15-0	MANUFACTURE_ID	R		40h

8.6.13.2 Device ID (DeviceAddress) Register (SMBus address = FFh) [reset = 0h]

Figure 39. Device ID (DeviceAddress) Register (SMBus address = FFh) [reset = 0h]

15-8
Reserved
R
7-0
DEVICE_ID
R

LEGEND: R/W = Read/Write; R = Read only; -n = value after reset

Table 46. Device ID (DeviceAddress) Register Field Descriptions

SMBus BIT	FIELD	TYPE	RESET	DESCRIPTION (READ ONLY)
15-8	Reserved	R	0b	Reserved
7-0	DEVICE_ID	R	0b	SMBus: 79h

Copyright © 2017, Texas Instruments Incorporated

9 Application and Implementation

NOTE

Information in the following applications sections is not part of the TI component specification, and TI does not warrant its accuracy or completeness. TI's customers are responsible for determining suitability of components for their purposes. Customers should validate and test their design implementation to confirm system functionality.

9.1 Application Information

The bq2570xEVM-732 evaluation module (EVM) is a complete charger module for evaluating the bq25700A. The application curves were taken using the bq2570xEVM-732. Refer to the EVM user's guide (SLUUBG6) for EVM information.

9.2 Typical Application

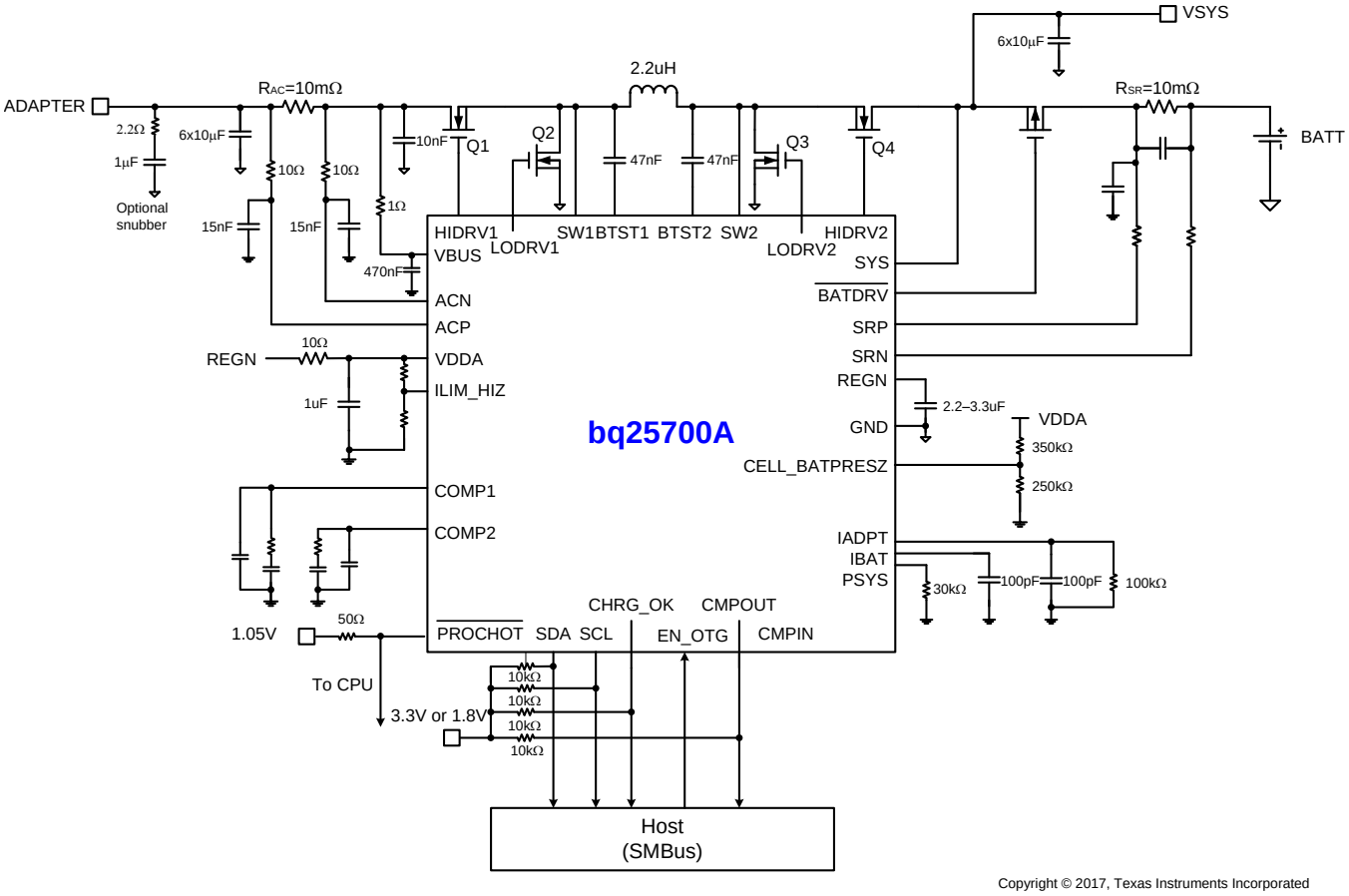

Figure 40. Application Diagram

9.2.1 Design Requirements

DESIGN PARAMETER	EXAMPLE VALUE
Input Voltage (1)	3.5 V < Adapter Voltage < 24 V
Input Current Limit (1)	3.2 A for 65 W adapter
Battery Charge Voltage (2)	8400 mV for 2s battery

(1) Refer to adapter specification for settings for Input Voltage and Input Current Limit.
(2) Refer to battery specification for settings.

Copyright © 2017, Texas Instruments Incorporated

Typical Application (continued)

DESIGN PARAMETER	EXAMPLE VALUE
Battery Charge Current(2)	3072 mA for 2s battery
Minimum System Voltage(2)	614 mV for 2s battery

9.2.2 Detailed Design Procedure

The parameters are configurable using the evaluation software. The simplified application circuit (see Figure 40, as the application diagram) shows the minimum component requirements. Inductor, capacitor, and MOSFET selection are explained in the rest of this section. Refer to the EVM user's guide (SLUUBG6) for the complete application schematic.

9.2.2.1 Input Snubber and Filter for Voltage Spike Damping

During adapter hot plug-in, the parasitic inductance and input capacitor from the adapter cable form a second order system. The voltage spike at VBUS pin maybe beyond IC maximum voltage rating and damage IC. The input filter must be carefully designed and tested to prevent over voltage event on VBUS pin.

There are several methods to damp or limit the over voltage spike during adapter hot plug-in. An electrolytic capacitor with high ESR as an input capacitor can damp the over voltage spike well below the IC maximum pin voltage rating. A high current capability TVS Zener diode can also limit the over voltage level to an IC safe level. However these two solutions may not have low cost or small size.

A cost effective and small size solution is shown in Figure 41. The R1 and C1 are composed of a damping RC network to damp the hot plug-in oscillation. As a result the over voltage spike is limited to a safe level. D1 is used for reverse voltage protection for VBUS pin. C2 is VBUS pin decoupling capacitor and it should be placed as close as possible to VBUS pin. C2 value should be less than C1 value so R1 can dominate the equivalent ESR value to get enough damping effect. R2 is used to limit inrush current of D1 to prevent D1 getting damage when adapter hot plug-in. R2 and C2 should have 10 µs time constant to limit the dv/dt on VBUS pin to reduce inrush current when adapter hot plug in. R1 has high inrush current. R1 package must be sized enough to handle inrush current power loss according to resistor manufacturer's data sheet. The filter components' value always need to be verified with real application and minor adjustments may need to fit in the real application circuit.

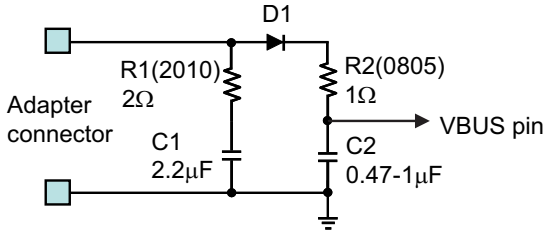

Figure 41. Input Filter

9.2.2.2 ACP-ACN Input Filter

The bq25700A has average current mode control. The input current sensing through ACP/ACN is critical to recover inductor current ripple. Parasitic inductance on board will generate high frequency ringing on ACP-ACN which overwhelms converter sensed inductor current information, so it is difficult to manage parasitic inductance created based on different PCB layout. Bigger parasitic inductance will generate bigger sense current ringing which will cause the average current control loop to go into oscillation.

For real system board condition, we suggest to use below circuit design to get best result and filter noise induced from different PCB parasitic factor. With time constant of filter from 47 nsec to 200 nsec, the filtering on ringing is effective and in the meantime, the delay of on the sensed signal is small and therefore poses no concern for average current mode control.

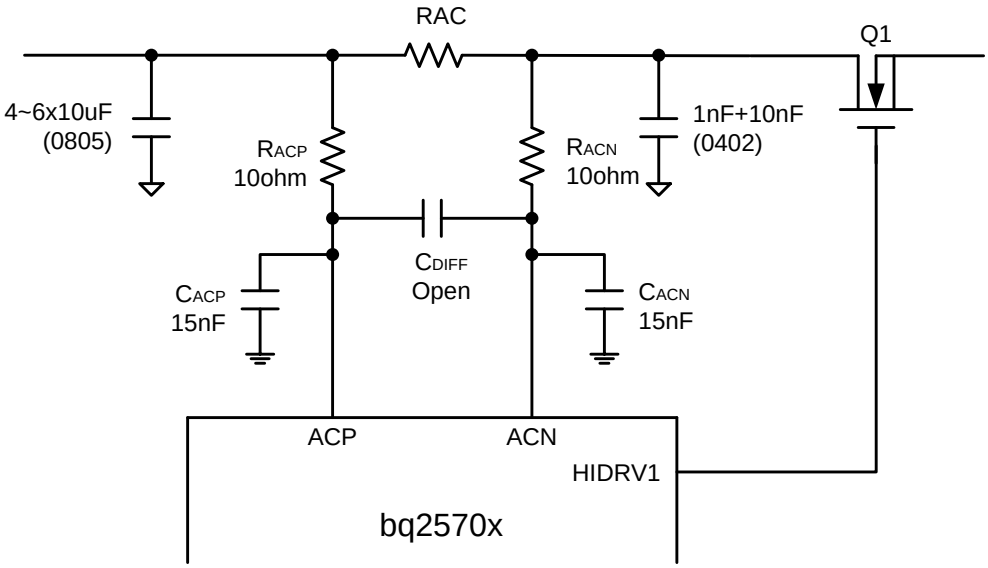

Copyright © 2017, Texas Instruments Incorporated

Figure 42. ACN-ACP Input Filter

9.2.2.3 Inductor Selection

The bq25700A has two selectable fixed switching frequency. Higher switching frequency allows the use of smaller inductor and capacitor values. Inductor saturation current should be higher than the charging current (I_{CHG}) plus half the ripple current (I_{RIPPLE}):

$$I_{SAT} \geq I_{CHG} + (1/2)\, I_{RIPPLE} \tag{3}$$

The inductor ripple current in buck operation depends on input voltage (V_{IN}), duty cycle ($D_{BUCK} = V_{OUT}/V_{IN}$), switching frequency ($f_S$) and inductance (L):

$$I_{RIPPLE_BUCK} = \frac{V_{IN} \times D \times (1 - D)}{f_S \times L} \tag{4}$$

During boost operation, the duty cycle is:

$$D_{BOOST} = 1 - (V_{IN}/V_{BAT})$$

and the ripple current is:

$$I_{RIPPLE_BOOST} = (VIN \times D_{BOOST}) / (f_S \times L)$$

The maximum inductor ripple current happens with D = 0.5 or close to 0.5. For example, the battery charging voltage range is from 9 V to 12.6 V for 3-cell battery pack. For 20-V adapter voltage, 10-V battery voltage gives the maximum inductor ripple current. Another example is 4-cell battery, the battery voltage range is from 12 V to 16.8 V, and 12-V battery voltage gives the maximum inductor ripple current.

Usually inductor ripple is designed in the range of (20 – 40%) maximum charging current as a trade-off between inductor size and efficiency for a practical design.

9.2.2.4 Input Capacitor

Input capacitor should have enough ripple current rating to absorb input switching ripple current. The worst case RMS ripple current is half of the charging current when duty cycle is 0.5 in buck mode. If the converter does not operate at 50% duty cycle, then the worst case capacitor RMS current occurs where the duty cycle is closest to 50% and can be estimated by Equation 5:

$$I_{CIN} = I_{CHG} \times \sqrt{D \times (1 - D)} \tag{5}$$

Copyright © 2017, Texas Instruments Incorporated

Low ESR ceramic capacitor such as X7R or X5R is preferred for input decoupling capacitor and should be placed to the drain of the high side MOSFET and source of the low side MOSFET as close as possible. Voltage rating of the capacitor must be higher than normal input voltage level. 25 V rating or higher capacitor is preferred for 19 V - 20 V input voltage. Minimum 4 - 6 pcs of 10-µF 0805 size capacitor is suggested for 45 - 65 W adapter design.

Ceramic capacitors show a dc-bias effect. This effect reduces the effective capacitance when a dc-bias voltage is applied across a ceramic capacitor, as on the input capacitor of a charger. The effect may lead to a significant capacitance drop, especially for high input voltages and small capacitor packages. See the manufacturer's datasheet about the performance with a dc bias voltage applied. It may be necessary to choose a higher voltage rating or nominal capacitance value in order to get the required value at the operating point.

9.2.2.5 Output Capacitor

Output capacitor also should have enough ripple current rating to absorb output switching ripple current. In buck mode the output capacitor RMS current is given:

To get good loop stability, the resonant frequency of the output inductor and output capacitor should be designed between 10 kHz and 20 kHz. The preferred ceramic capacitor is 25-V X7R or X5R for output capacitor. Minimum 6 pcs of 10-µF 0805 size capacitor is suggested to be placed by the inductor. Place the capacitors after Q4 drain. Place minimum 10 µF after the charge current sense resistor for best stability.

Ceramic capacitors show a dc-bias effect. This effect reduces the effective capacitance when a dc-bias voltage is applied across a ceramic capacitor, as on the output capacitor of a charger. The effect may lead to a significant capacitance drop, especially for high output voltages and small capacitor packages. See the manufacturer's data sheet about the performance with a dc bias voltage applied. It may be necessary to choose a higher voltage rating or nominal capacitance value in order to get the required value at the operating point.

9.2.2.6 Power MOSFETs Selection

Four external N-channel MOSFETs are used for a synchronous switching battery charger. The gate drivers are internally integrated into the IC with 6 V of gate drive voltage. 30 V or higher voltage rating MOSFETs are preferred for 19 V - 20 V input voltage.

Figure-of-merit (FOM) is usually used for selecting proper MOSFET based on a tradeoff between the conduction loss and switching loss. For the top side MOSFET, FOM is defined as the product of a MOSFET's on-resistance, $R_{DS(ON)}$, and the gate-to-drain charge, Q_{GD}. For the bottom side MOSFET, FOM is defined as the product of the MOSFET's on-resistance, $R_{DS(ON)}$, and the total gate charge, Q_G.

$$FOM_{top} = R_{DS(on)} \times Q_{GD};\ FOM_{bottom} = R_{DS(on)} \times Q_G \tag{6}$$

The lower the FOM value, the lower the total power loss. Usually lower $R_{DS(ON)}$ has higher cost with the same package size.

The top-side MOSFET loss includes conduction loss and switching loss. It is a function of duty cycle ($D=V_{OUT}/V_{IN}$), charging current (I_{CHG}), MOSFET's on-resistance ($R_{DS(ON)}$), input voltage (V_{IN}), switching frequency (f_S), turn on time (t_{on}) and turn off time (t_{off}):

$$P_{top} = D \times I_{CHG}^2 \times R_{DS(on)} + \frac{1}{2} \times V_{IN} \times I_{CHG} \times (t_{on} + t_{off}) \times f_s \tag{7}$$

The first item represents the conduction loss. Usually MOSFET $R_{DS(ON)}$ increases by 50% with 100°C junction temperature rise. The second term represents the switching loss. The MOSFET turn-on and turn-off times are given by:

$$t_{on} = \frac{Q_{SW}}{I_{on}},\quad t_{off} = \frac{Q_{SW}}{I_{off}} \tag{8}$$

where Q_{sw} is the switching charge, I_{on} is the turn-on gate driving current and I_{off} is the turn-off gate driving current. If the switching charge is not given in MOSFET datasheet, it can be estimated by gate-to-drain charge (Q_{GD}) and gate-to-source charge (Q_{GS}):

$$Q_{SW} = Q_{GD} + \frac{1}{2} \times Q_{GS} \tag{9}$$

Gate driving current can be estimated by REGN voltage (V_{REGN}), MOSFET plateau voltage (V_{plt}), total turn-on gate resistance (R_{on}) and turn-off gate resistance (R_{off}) of the gate driver:

$$I_{on} = \frac{V_{REGN} - V_{plt}}{R_{on}}, \quad I_{off} = \frac{V_{plt}}{R_{off}} \tag{10}$$

The conduction loss of the bottom-side MOSFET is calculated with the following equation when it operates in synchronous continuous conduction mode:

$$P_{bottom} = (1 - D) \times I_{CHG}^{2} \times R_{DS(on)} \tag{11}$$

When charger operates in non-synchronous mode, the bottom-side MOSFET is off. As a result all the freewheeling current goes through the body-diode of the bottom-side MOSFET. The body diode power loss depends on its forward voltage drop (V_F), non-synchronous mode charging current ($I_{NONSYNC}$), and duty cycle (D).

$$P_D = V_F \times I_{NONSYNC} \times (1 - D) \tag{12}$$

The maximum charging current in non-synchronous mode can be up to 0.25 A for a 10-mΩ charging current sensing resistor or 0.5 A if battery voltage is below 2.5 V. The minimum duty cycle happens at lowest battery voltage. Choose the bottom-side MOSFET with either an internal Schottky or body diode capable of carrying the maximum non-synchronous mode charging current.

9.2.3 Application Curves

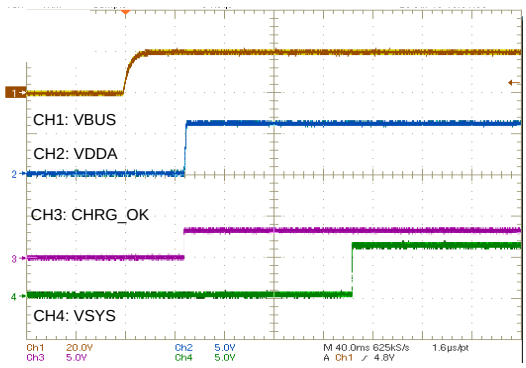

2-cell without battery

Figure 43. Power Up from 20 V

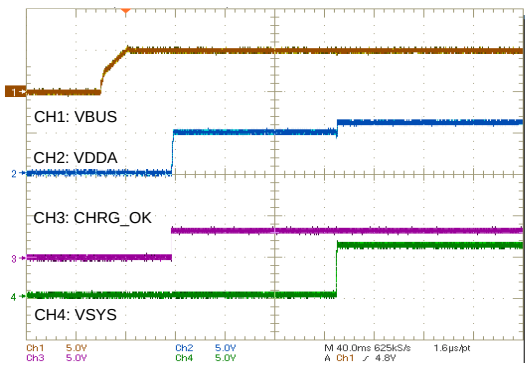

2-cell without battery

Figure 44. Power Up from 5 V

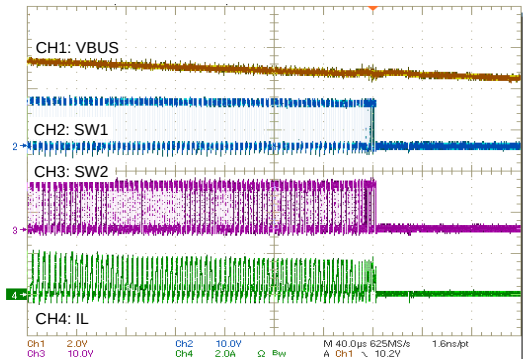

3-cell VBAT = 10 V

Figure 45. Power Off from 12 V

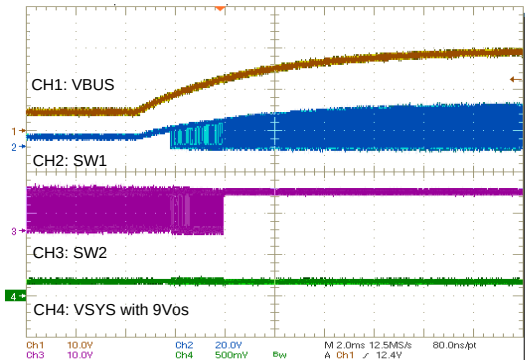

VBUS 5 V to 20 V

Figure 46. System Regulation

Copyright © 2017, Texas Instruments Incorporated

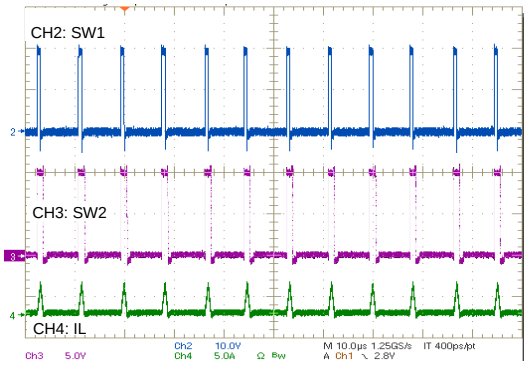

VBUS = 20 V, VSYS = 10 V, ISYS = 200 mA

Figure 47. PFM Operation

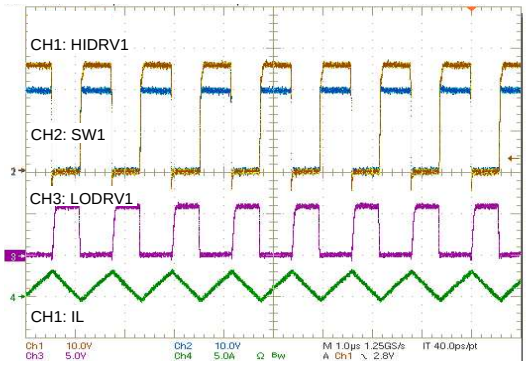

Figure 48. PWM Operation

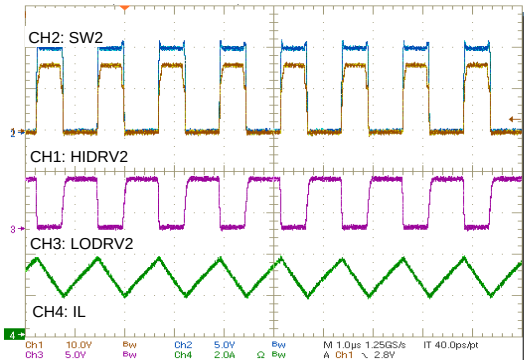

VBUS = 5 V, VBAT = 10 V

Figure 49. Switching During Boost Mode

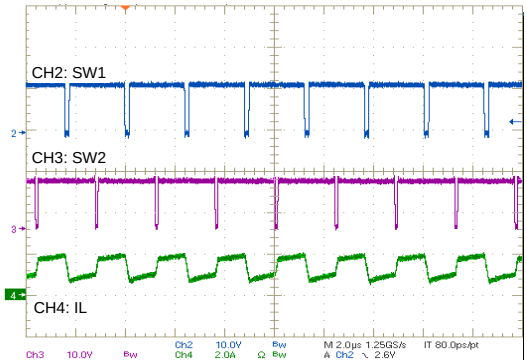

VBUS = 12 V, VBAT = 12 V

Figure 50. Switching During Buck Boost Mode

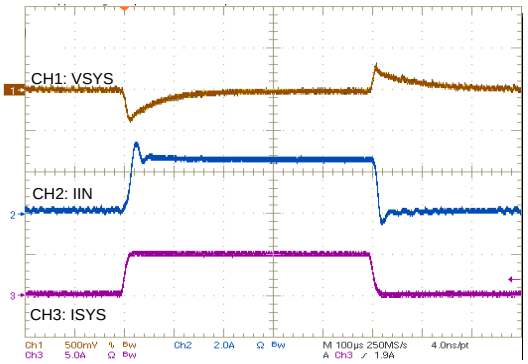

VBUS = 12 V/3.3 A, 3-cell, VSYS = 9 V, Without battery

Figure 51. System Regulation in Buck Mode

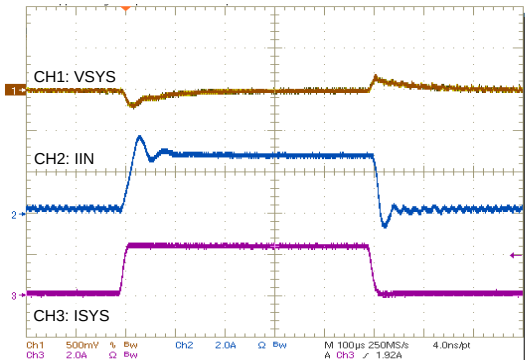

VBUS = 9 V/3.3 A, 3-cell, VSYS = 9 V, Without battery

Figure 52. System Regulation in Buck Boost Mode

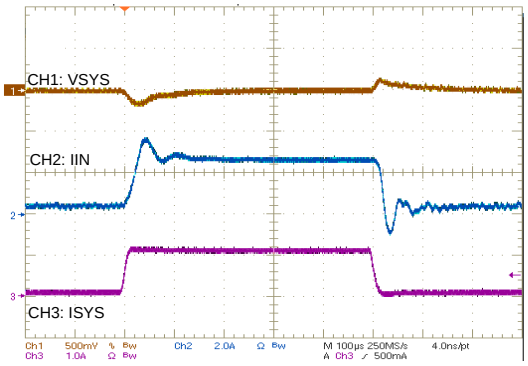

VBUS = 5 V/3.3 A, 3-cell, VSYS = 9 V, Without battery

Figure 53. System Regulation in Boost Mode

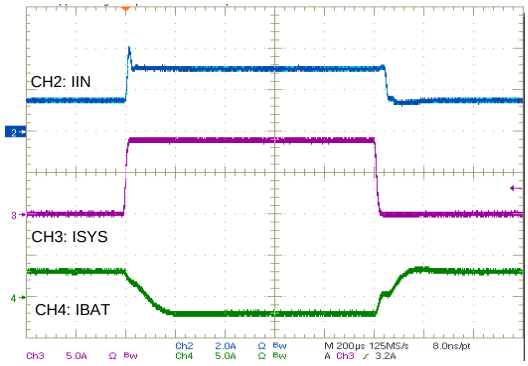

VBUS = 20 V/3.3 V, VBAT = 7.5 V

Figure 54. Input Current Regulation in Buck Mode

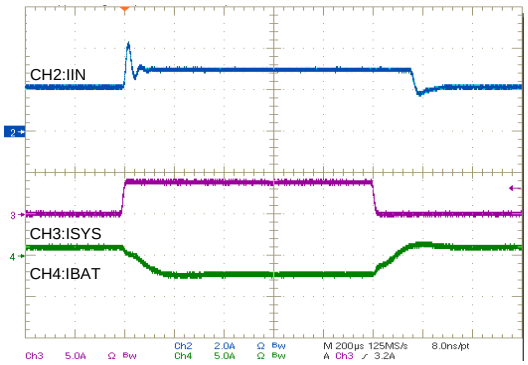

VBUS = 5 V/3.3 V, VBAT = 7.5 V

Figure 55. Input Current in Boost Mode

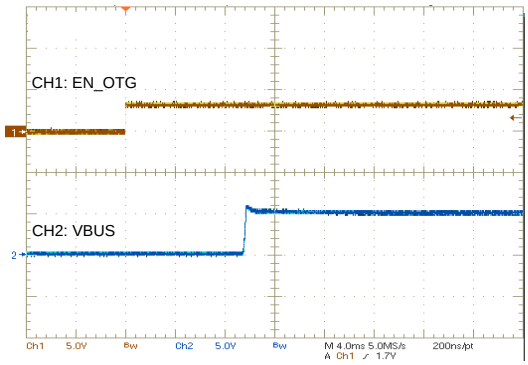

VBUS = 5 V

Figure 56. OTG Power Up from 8 V Battery

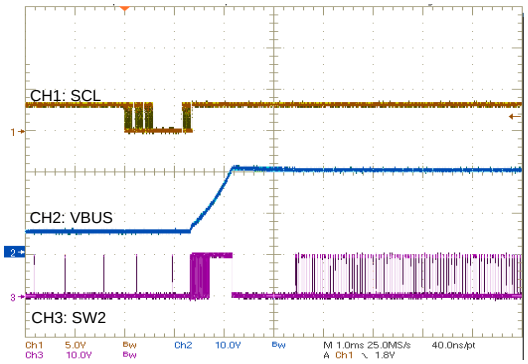

VBAT = 10 V, VBUS 5 V to 20 V, IOTG = 500 mA

Figure 57. OTG Voltage Ramp Up

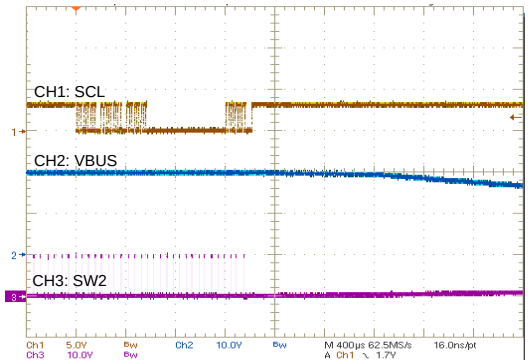

Figure 58. OTG Power Off

Copyright © 2017, Texas Instruments Incorporated

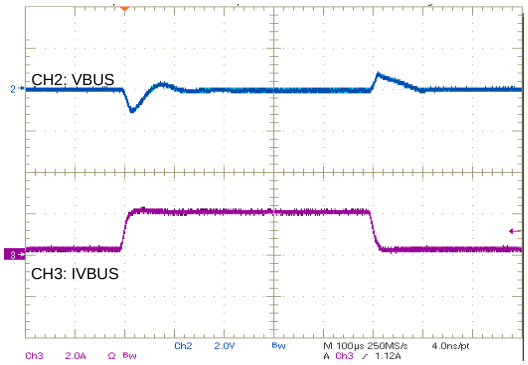

VBAT = 10 V, VBUS = 20 V

Figure 59. OTG Load Transient

10 Power Supply Recommendations

The valid adapter range is from 3.5 V (V_{VBUS_CONVEN}) to 24 V (ACOV) with at least 500-mA current rating. When CHRG_OK goes HIGH, the system is powered from adapter through the charger. When adapter is removed, the system is connected to battery through BATFET. Typically the battery depletion threshold should be greater than the minimum system voltage so that the battery capacity can be fully utilized for maximum battery life.

Copyright © 2017, Texas Instruments Incorporated

11 Layout

11.1 Layout Guidelines

The switching node rise and fall times should be minimized for minimum switching loss. Proper layout of the components to minimize high frequency current path loop (see *Layout Example* section) is important to prevent electrical and magnetic field radiation and high frequency resonant problems. Here is a PCB layout priority list for proper layout. Layout PCB according to this specific order is essential.

1. Place the input capacitor as close as possible to the supply of the switching MOSFET and ground connections. Use a short copper trace connection. These parts must be placed on the same layer of PCB using vias to make this connection.
2. The device must be placed close to the gate pins of the switching MOSFET. Keep the gate drive signal traces short for a clean MOSFET drive. The device can be placed on the other side of the PCB of switching MOSFETs.
3. Place an inductor input pin as close as possible to the output pin of the switching MOSFET. Minimize the copper area of this trace to lower electrical and magnetic field radiation but make the trace wide enough to carry the charging current. Do not use multiple layers in parallel for this connection. Minimize parasitic capacitance from this area to any other trace or plane.
4. The charging current sensing resistor should be placed right next to the inductor output. Route the sense leads connected across the sensing resistor back to the device in same layer, close to each other (minimize loop area) and do not route the sense leads through a high-current path (see Figure 61 for Kelvin connection for best current accuracy). Place a decoupling capacitor on these traces next to the device.
5. Place an output capacitor next to the sensing resistor output and ground.
6. Output capacitor ground connections must be tied to the same copper that connects to the input capacitor ground before connecting to system ground.
7. Use a single ground connection to tie the charger power ground to the charger analog ground. Just beneath the device, use analog ground copper pour but avoid power pins to reduce inductive and capacitive noise coupling.
8. Route analog ground separately from power ground. Connect analog ground and connect power ground separately. Connect analog ground and power ground together using power pad as the single ground connection point. Or using a 0-Ω resistor to tie analog ground to power ground (power pad should tie to analog ground in this case if possible).
9. Decoupling capacitors must be placed next to the device pins. Make trace connection as short as possible.
10. It is critical that the exposed power pad on the backside of the device package be soldered to the PCB ground.
11. The via size and number should be enough for a given current path. See the EVM design (SLUUBG6) for the recommended component placement with trace and via locations. For WQFN information, see SLUA271.

11.2 Layout Example

11.2.1 Layout Consideration of Current Path

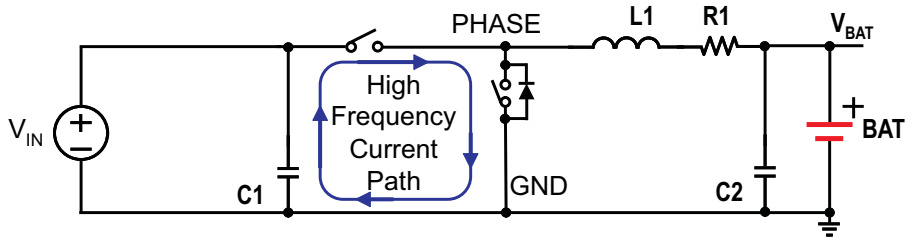

Figure 60. High Frequency Current Path

Layout Example (continued)

11.2.2 Layout Consideration of Short Circuit Protection

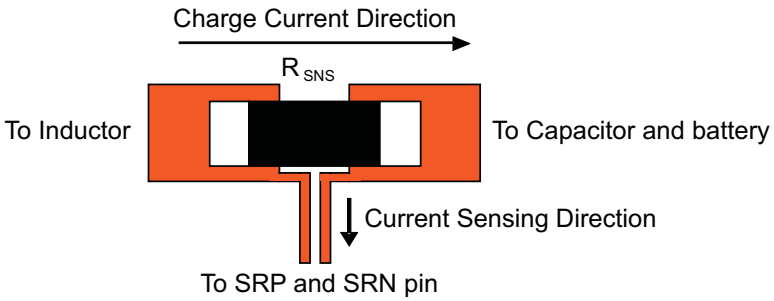

Figure 61. Sensing Resistor PCB Layout

Copyright © 2017, Texas Instruments Incorporated

12 Device and Documentation Support

12.1 Device Support

12.1.1 Third-Party Products Disclaimer

TI'S PUBLICATION OF INFORMATION REGARDING THIRD-PARTY PRODUCTS OR SERVICES DOES NOT CONSTITUTE AN ENDORSEMENT REGARDING THE SUITABILITY OF SUCH PRODUCTS OR SERVICES OR A WARRANTY, REPRESENTATION OR ENDORSEMENT OF SUCH PRODUCTS OR SERVICES, EITHER ALONE OR IN COMBINATION WITH ANY TI PRODUCT OR SERVICE.

12.2 Documentation Support

12.2.1 Related Documentation

For related documentation see the following:

- *Semiconductor and IC Package Thermal Metrics* Application Report SPRA953
- *bq2570x Evaluation Module* User's Guide SLUUBG6
- *QFN/SON PCB Attachment* Application Report SLUA271

12.3 Receiving Notification of Documentation Updates

To receive notification of documentation updates, navigate to the device product folder on ti.com. In the upper right corner, click on *Alert me* to register and receive a weekly digest of any product information that has changed. For change details, review the revision history included in any revised document.

12.4 Community Resources

The following links connect to TI community resources. Linked contents are provided "AS IS" by the respective contributors. They do not constitute TI specifications and do not necessarily reflect TI's views; see TI's Terms of Use.

TI E2E™ Online Community ***TI's Engineer-to-Engineer (E2E) Community.*** Created to foster collaboration among engineers. At e2e.ti.com, you can ask questions, share knowledge, explore ideas and help solve problems with fellow engineers.

Design Support ***TI's Design Support*** Quickly find helpful E2E forums along with design support tools and contact information for technical support.

12.5 Trademarks

E2E is a trademark of Texas Instruments.
All other trademarks are the property of their respective owners.

12.6 Electrostatic Discharge Caution

These devices have limited built-in ESD protection. The leads should be shorted together or the device placed in conductive foam during storage or handling to prevent electrostatic damage to the MOS gates.

12.7 Glossary

SLYZ022 — *TI Glossary*.

This glossary lists and explains terms, acronyms, and definitions.

13 Mechanical, Packaging, and Orderable Information

The following pages include mechanical, packaging, and orderable information. This information is the most current data available for the designated devices. This data is subject to change without notice and revision of this document. For browser-based versions of this data sheet, refer to the left-hand navigation.

Copyright © 2017, Texas Instruments Incorporated

PACKAGING INFORMATION

Orderable Device	Status (1)	Package Type	Package Drawing	Pins	Package Qty	Eco Plan (2)	Lead/Ball Finish (6)	MSL Peak Temp (3)	Op Temp (°C)	Device Marking (4/5)	Samples
BQ25700ARSNR	ACTIVE	QFN	RSN	32	3000	TBD	Call TI	Call TI	-40 to 85	BQ 25700A	Samples
BQ25700ARSNT	ACTIVE	QFN	RSN	32	250	TBD	Call TI	Call TI	-40 to 85	BQ 25700A	Samples

(1) The marketing status values are defined as follows:
ACTIVE: Product device recommended for new designs.
LIFEBUY: TI has announced that the device will be discontinued, and a lifetime-buy period is in effect.
NRND: Not recommended for new designs. Device is in production to support existing customers, but TI does not recommend using this part in a new design.
PREVIEW: Device has been announced but is not in production. Samples may or may not be available.
OBSOLETE: TI has discontinued the production of the device.

(2) **RoHS:** TI defines "RoHS" to mean semiconductor products that are compliant with the current EU RoHS requirements for all 10 RoHS substances, including the requirement that RoHS substance do not exceed 0.1% by weight in homogeneous materials. Where designed to be soldered at high temperatures, "RoHS" products are suitable for use in specified lead-free processes. TI may reference these types of products as "Pb-Free".
RoHS Exempt: TI defines "RoHS Exempt" to mean products that contain lead but are compliant with EU RoHS pursuant to a specific EU RoHS exemption.
Green: TI defines "Green" to mean the content of Chlorine (Cl) and Bromine (Br) based flame retardants meet JS709B low halogen requirements of <=1000ppm threshold. Antimony trioxide based flame retardants must also meet the <=1000ppm threshold requirement.

(3) MSL, Peak Temp. - The Moisture Sensitivity Level rating according to the JEDEC industry standard classifications, and peak solder temperature.

(4) There may be additional marking, which relates to the logo, the lot trace code information, or the environmental category on the device.

(5) Multiple Device Markings will be inside parentheses. Only one Device Marking contained in parentheses and separated by a "~" will appear on a device. If a line is indented then it is a continuation of the previous line and the two combined represent the entire Device Marking for that device.

(6) Lead/Ball Finish - Orderable Devices may have multiple material finish options. Finish options are separated by a vertical ruled line. Lead/Ball Finish values may wrap to two lines if the finish value exceeds the maximum column width.

Important Information and Disclaimer: The information provided on this page represents TI's knowledge and belief as of the date that it is provided. TI bases its knowledge and belief on information provided by third parties, and makes no representation or warranty as to the accuracy of such information. Efforts are underway to better integrate information from third parties. TI has taken and continues to take reasonable steps to provide representative and accurate information but may not have conducted destructive testing or chemical analysis on incoming materials and chemicals. TI and TI suppliers consider certain information to be proprietary, and thus CAS numbers and other limited information may not be available for release.

In no event shall TI's liability arising out of such information exceed the total purchase price of the TI part(s) at issue in this document sold by TI to Customer on an annual basis.

TAPE AND REEL INFORMATION

REEL DIMENSIONS

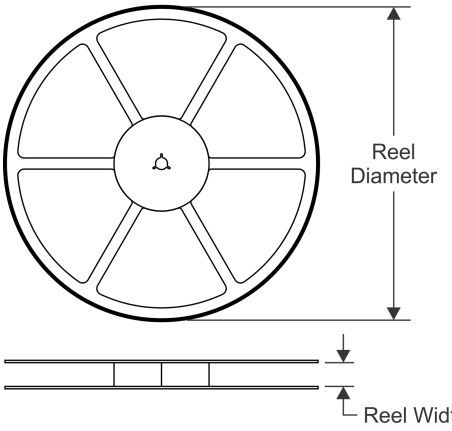

TAPE DIMENSIONS

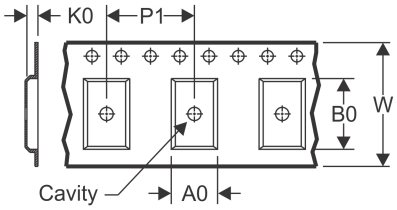

A0	Dimension designed to accommodate the component width
B0	Dimension designed to accommodate the component length
K0	Dimension designed to accommodate the component thickness
W	Overall width of the carrier tape
P1	Pitch between successive cavity centers

QUADRANT ASSIGNMENTS FOR PIN 1 ORIENTATION IN TAPE

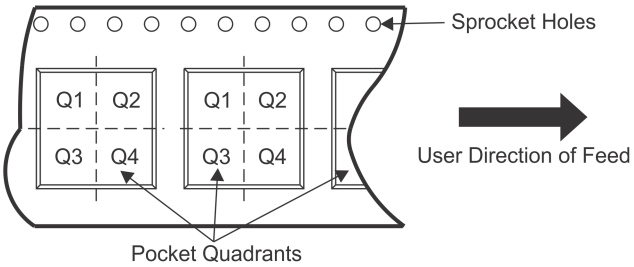

*All dimensions are nominal

Device	Package Type	Package Drawing	Pins	SPQ	Reel Diameter (mm)	Reel Width W1 (mm)	A0 (mm)	B0 (mm)	K0 (mm)	P1 (mm)	W (mm)	Pin1 Quadrant
BQ25700ARSNR	QFN	RSN	32	3000	330.0	12.4	4.25	4.25	1.15	8.0	12.0	Q2
BQ25700ARSNT	QFN	RSN	32	250	180.0	12.4	4.25	4.25	1.15	8.0	12.0	Q2

TAPE AND REEL BOX DIMENSIONS

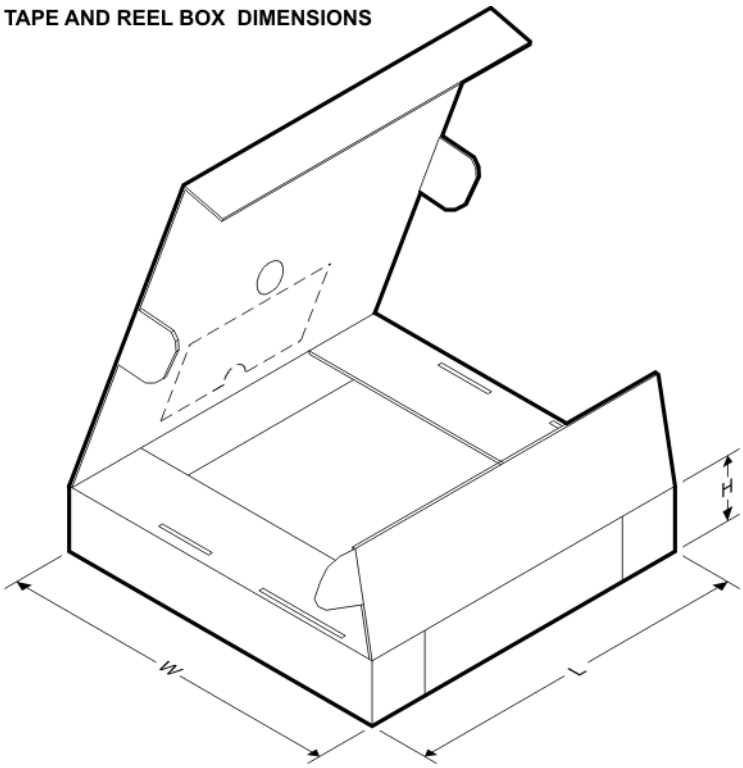

*All dimensions are nominal

Device	Package Type	Package Drawing	Pins	SPQ	Length (mm)	Width (mm)	Height (mm)
BQ25700ARSNR	QFN	RSN	32	3000	367.0	367.0	35.0
BQ25700ARSNT	QFN	RSN	32	250	210.0	185.0	35.0

RSN (S–PWQFN–N32) PLASTIC QUAD FLATPACK NO–LEAD

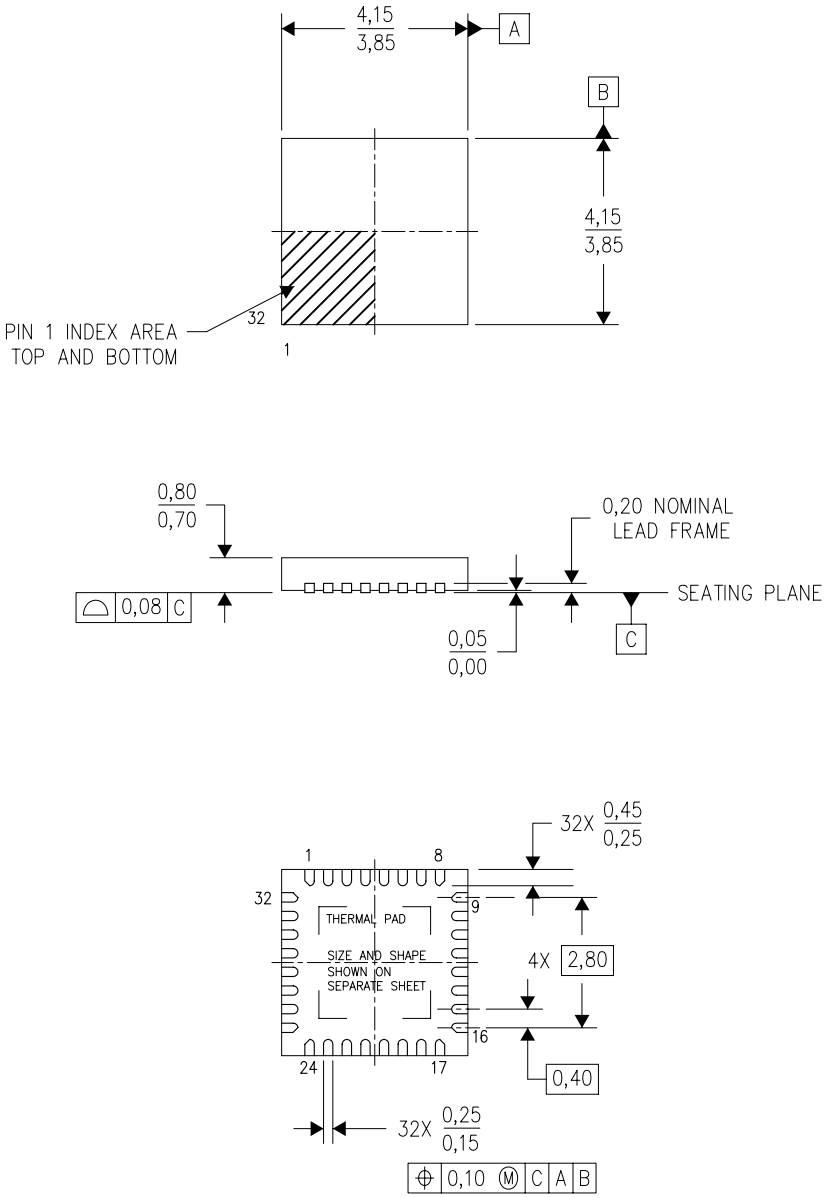

4207561/C 08/11

NOTES:
A. All linear dimensions are in millimeters. Dimensioning and tolerancing per ASME Y14.5M–1994.
B. This drawing is subject to change without notice.
C. QFN (Quad Flatpack No–Lead) Package configuration.
D. The package thermal pad must be soldered to the board for thermal and mechanical performance.
E. See the additional figure in the Product Data Sheet for details regarding the exposed thermal pad features and dimensions.

IMPORTANT NOTICE

Texas Instruments Incorporated (TI) reserves the right to make corrections, enhancements, improvements and other changes to its semiconductor products and services per JESD46, latest issue, and to discontinue any product or service per JESD48, latest issue. Buyers should obtain the latest relevant information before placing orders and should verify that such information is current and complete.

TI's published terms of sale for semiconductor products (http://www.ti.com/sc/docs/stdterms.htm) apply to the sale of packaged integrated circuit products that TI has qualified and released to market. Additional terms may apply to the use or sale of other types of TI products and services.

Reproduction of significant portions of TI information in TI data sheets is permissible only if reproduction is without alteration and is accompanied by all associated warranties, conditions, limitations, and notices. TI is not responsible or liable for such reproduced documentation. Information of third parties may be subject to additional restrictions. Resale of TI products or services with statements different from or beyond the parameters stated by TI for that product or service voids all express and any implied warranties for the associated TI product or service and is an unfair and deceptive business practice. TI is not responsible or liable for any such statements.

Buyers and others who are developing systems that incorporate TI products (collectively, "Designers") understand and agree that Designers remain responsible for using their independent analysis, evaluation and judgment in designing their applications and that Designers have full and exclusive responsibility to assure the safety of Designers' applications and compliance of their applications (and of all TI products used in or for Designers' applications) with all applicable regulations, laws and other applicable requirements. Designer represents that, with respect to their applications, Designer has all the necessary expertise to create and implement safeguards that (1) anticipate dangerous consequences of failures, (2) monitor failures and their consequences, and (3) lessen the likelihood of failures that might cause harm and take appropriate actions. Designer agrees that prior to using or distributing any applications that include TI products, Designer will thoroughly test such applications and the functionality of such TI products as used in such applications.

TI's provision of technical, application or other design advice, quality characterization, reliability data or other services or information, including, but not limited to, reference designs and materials relating to evaluation modules, (collectively, "TI Resources") are intended to assist designers who are developing applications that incorporate TI products; by downloading, accessing or using TI Resources in any way, Designer (individually or, if Designer is acting on behalf of a company, Designer's company) agrees to use any particular TI Resource solely for this purpose and subject to the terms of this Notice.

TI's provision of TI Resources does not expand or otherwise alter TI's applicable published warranties or warranty disclaimers for TI products, and no additional obligations or liabilities arise from TI providing such TI Resources. TI reserves the right to make corrections, enhancements, improvements and other changes to its TI Resources. TI has not conducted any testing other than that specifically described in the published documentation for a particular TI Resource.

Designer is authorized to use, copy and modify any individual TI Resource only in connection with the development of applications that include the TI product(s) identified in such TI Resource. NO OTHER LICENSE, EXPRESS OR IMPLIED, BY ESTOPPEL OR OTHERWISE TO ANY OTHER TI INTELLECTUAL PROPERTY RIGHT, AND NO LICENSE TO ANY TECHNOLOGY OR INTELLECTUAL PROPERTY RIGHT OF TI OR ANY THIRD PARTY IS GRANTED HEREIN, including but not limited to any patent right, copyright, mask work right, or other intellectual property right relating to any combination, machine, or process in which TI products or services are used. Information regarding or referencing third-party products or services does not constitute a license to use such products or services, or a warranty or endorsement thereof. Use of TI Resources may require a license from a third party under the patents or other intellectual property of the third party, or a license from TI under the patents or other intellectual property of TI.

TI RESOURCES ARE PROVIDED "AS IS" AND WITH ALL FAULTS. TI DISCLAIMS ALL OTHER WARRANTIES OR REPRESENTATIONS, EXPRESS OR IMPLIED, REGARDING RESOURCES OR USE THEREOF, INCLUDING BUT NOT LIMITED TO ACCURACY OR COMPLETENESS, TITLE, ANY EPIDEMIC FAILURE WARRANTY AND ANY IMPLIED WARRANTIES OF MERCHANTABILITY, FITNESS FOR A PARTICULAR PURPOSE, AND NON-INFRINGEMENT OF ANY THIRD PARTY INTELLECTUAL PROPERTY RIGHTS. TI SHALL NOT BE LIABLE FOR AND SHALL NOT DEFEND OR INDEMNIFY DESIGNER AGAINST ANY CLAIM, INCLUDING BUT NOT LIMITED TO ANY INFRINGEMENT CLAIM THAT RELATES TO OR IS BASED ON ANY COMBINATION OF PRODUCTS EVEN IF DESCRIBED IN TI RESOURCES OR OTHERWISE. IN NO EVENT SHALL TI BE LIABLE FOR ANY ACTUAL, DIRECT, SPECIAL, COLLATERAL, INDIRECT, PUNITIVE, INCIDENTAL, CONSEQUENTIAL OR EXEMPLARY DAMAGES IN CONNECTION WITH OR ARISING OUT OF TI RESOURCES OR USE THEREOF, AND REGARDLESS OF WHETHER TI HAS BEEN ADVISED OF THE POSSIBILITY OF SUCH DAMAGES.

Unless TI has explicitly designated an individual product as meeting the requirements of a particular industry standard (e.g., ISO/TS 16949 and ISO 26262), TI is not responsible for any failure to meet such industry standard requirements.

Where TI specifically promotes products as facilitating functional safety or as compliant with industry functional safety standards, such products are intended to help enable customers to design and create their own applications that meet applicable functional safety standards and requirements. Using products in an application does not by itself establish any safety features in the application. Designers must ensure compliance with safety-related requirements and standards applicable to their applications. Designer may not use any TI products in life-critical medical equipment unless authorized officers of the parties have executed a special contract specifically governing such use. Life-critical medical equipment is medical equipment where failure of such equipment would cause serious bodily injury or death (e.g., life support, pacemakers, defibrillators, heart pumps, neurostimulators, and implantables). Such equipment includes, without limitation, all medical devices identified by the U.S. Food and Drug Administration as Class III devices and equivalent classifications outside the U.S.

TI may expressly designate certain products as completing a particular qualification (e.g., Q100, Military Grade, or Enhanced Product). Designers agree that it has the necessary expertise to select the product with the appropriate qualification designation for their applications and that proper product selection is at Designers' own risk. Designers are solely responsible for compliance with all legal and regulatory requirements in connection with such selection.

Designer will fully indemnify TI and its representatives against any damages, costs, losses, and/or liabilities arising out of Designer's non-compliance with the terms and provisions of this Notice.

Mailing Address: Texas Instruments, Post Office Box 655303, Dallas, Texas 75265
Copyright © 2017, Texas Instruments Incorporated